The George W. Woodruff
School of Mechanical Engineering

(NASA-CR-182819) LIFTING AND TRANSPORT VEHICLE FOR LUNAR APPLICATIONS Advanced Space Design Project (Georgia Inst. of Tech.) 148 p

N90-70721

Unclas
00/37 0279996

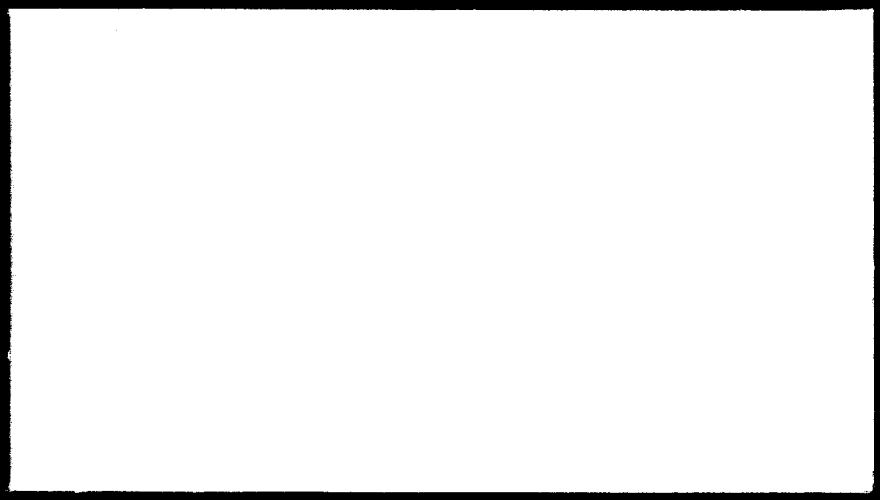

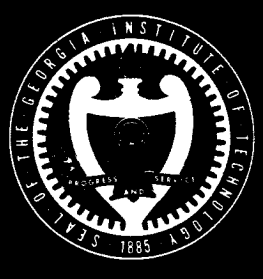

Georgia Institute of Technology

Atlanta, Georgia 30332

GEORGIA TECH 1885-1985

DESIGNING TOMORROW TODAY

THE GEORGE W. WOODRUFF SCHOOL OF
MECHANICAL ENGINEERING

ME 4182
MECHANICAL DESIGN ENGINEERING

NASA/UNIVERSITY ADVANCED SPACE DESIGN PROJECT

LIFTING AND TRANSPORT VEHICLE FOR LUNAR APPLICATIONS

June 1986

Jeff Dilg
Robert Dirksen
Joe Gentry
Jefferson hynds
David Martucci
Michael Minchew
Bruce Reynolds

Georgia Institute of Technology
Atlanta, Georgia 30332-0405

An Equal Education and Employment Opportunity Institution

A Unit of the University System of Georgia

TABLE OF CONTENTS

Introduction: Back to the Moon 1

Problem Statement 3

Historical Background

a. The Lunar Environment 6

b. The Lunar Roving Vehicle 8

Systems Description

a. Fork Lifting System 12

1. Kinematics

2. Hydraulics

3. Materials

b. Chassis System 22

c. Drive and Control System 24

1. Power Source

2. Motors

3. Wheels

4. Steering

d. Thermal Protection System 35

1. Heat Sink

2. Radiation Sheilding

e. Instrumentation 41

Conclusions 43

References 45

Appendices

a. Design Analysis (Calculations)

b. Design Drawings

c. Computer Programs

d. Progress Reports

e. Record of Invention

f. Alternate Concept Drawings

INTRODUCTION

With so many significant advances in the space program it is important that we as a nation not become complacent in our development of new space technologies. With the zeal of the earliest inventors and scientists striving to make new advances in ancient times, the goal of a permanently manned space station is already being advanced. But, what is beyond the space station project?

Many scientists and researchers think the next major project after the space station should be returning to the moon to set up a permanent outpost. Many reasons are listed. The main thrust of the arguement for returning to the moon is its potential for being a space terminal. In other words, the resources on the moon, most notably oxygen, can provide the means for probing deeper into space. Mars is one destination that would be made easier to reach by utilizing the energy potential of the moon's oxygen.

Structures must be built on the moon where astronauts can live and work. A forklift is essential in builting structures. Many materials and supplies are easily transported on pallets. These pallets must many times be raised onto scafolding. The lunar forklift outlined here is designed to raise and transport loaded pallets. Other construction equipment will be needed on

the moon. Vehicles like graders, cranes and bulldozers must also be designed before the moon can be inhabitited.

PROBLEM STATEMENT

To construct permanant work stations and living quarters on the moon it will be necessary to lift materials stacked on pallets. The pallets will have to be moved short distances and possibly raised as high as fifteen feet. On Earth, a forklift would be used to carry out this function of the construction process. A vehicle with some type of fork lifting system is needed on the moon. It is proposed to design a vehicle to do the task of lifting pallets on the moon.

Several goals that must be achieved. The paramount concern on the moon is the safety of the human workers. For this reason, 100 % reliability is our first goal. The movement of the fork must be smooth and precise. The entire vehicle must be stable at all times. The load must be restricted from moving while the vehicle is in operation by a means other than the friction force on the forks. The controls must be simple to operate without requiring the astronaut to make complex movements. Access to the control area must be clear and free of obstacles. The control area must also accomodate the oxygen backpack worn by the operator. All of these objectives must be met to insure the safety of the operator.

Other objectives that must be met concern the operating characteristics of the vehicle. The

construction site will be graded so that the forklift will not encounter severe off road conditions, but it must be able to negotiate the loose surface of the moon. The maximum speed that will be needed is 10 miles per hour. The fork lifting system should be able to lift 315 kilograms, which is equivalent to supplying 700 pounds-force on Earth. The maximum lift height will be 15 feet. Finally, the time that the vehicle must be able to continue operating without maintinance or recharging should be at least eight hours.

The last goal is to make the vehicle as compact and lightweight as possible. This vehicle must be taken to the moon. Weight is perhaps the most important concern in the shipping of the vehicle to the moon. The typical cost of shipping to the moon is $15,000 per pound the material.

The extremely high cost of transporting the vehicle from Earth to the moon is a major design constraint. The design must seek to minimize the mass of the vehicle. The cost of transporiation is so great that exotic production methods and techniques, that would not be economically feasible on Earth, may be used to reduce the mass of the vehicle.

The second major constraint is the environment on the moon. The vehicle and its systems must be able to withstand the severe thermal gradients and heating effects. Irradiation must not affect structural

materials. Cooling for any heat sources must be provided. The vehicle is useless if it cannot perform safely and usefully under the environment of the moon.

The last concern is testing of the design to establish confidence in its working safely. To evaluate vehicle performance we can construct a test bed to duplicate the soil conditions on the moon as closely as possible. The resistance of the structural materials to environmental conditions can be evaluated through radiation and thermal testing performed on Earth or on the shuttle. Assembly procedures should be evaluated to determine whether an astronaut in a space suit can make the required movements. All of these methods should be employed to determine with no uncertainty the reliability, effectiveness and safety of the proposed lifting and transport vehicle.

THE LUNAR ENVIRONMENT

The environment of the Moon is vastly different from that of the Earth. Most of these differences stem from the smaller mass of the Moon, that is unable to generate enough gravity to retain a detectable atmosphere. The lack of atmosphere complicates the design of any lunar vehicle.

The resulting vacuum would evacuate any fluid leak. Additional fluid must come from Earth since fluids evaporate almost instantly on the Moon. The rapid evaporation of fluids complicates the use of hydraulics. The thin film of hydraulic fluid which lubricates the seals on Earth would be lost on the pistons out stroke.

Cooling becomes a major problem on the Moon. Since the lack of atmosphere makes convective cooling impossible.

The Moon has no atmosphere to reflect or absorb radiation coming from space and the sun. As a result, the surface temperature of the Moon ranges from 240 F to -240 F. Heat and radiation are not only originated from space, but are also reflected and emitted from the lunar surface.

Lunar dust which covers the surface of the Moon has peculiar cohesive properties. A thin film of dust is settles on almost everything it comes in contact with. The lunar dust acts as an abrasive to surfaces it

contacts. Thick layers of dust on the Moon surface makes traction difficult. Dust is easily hurled up by spinning wheels. Thus, the design of any lunar vehicle should incorporate fenders. In addition, vehicles can easily create rutts while turning in the loose soil.

The lack of gravity reduces the weight of any ballast needed. Mass weights only one sixth on the Moon as is does on Earth. Momentum, however, remains the same. Momentum could easily tip over a vehicle while turning and makes stopping especially difficult.

THE LUNAR ROVER

The most ambitious program to develop lunar transportation was the development of the lunar roving vehicle (LRV). Carried to the moon on Apollo Flight 15, the LRV provided astronauts with a means of exploring a larger section of the moon's surface. In designing the lunar forklift, many of the same design considerations for the LRV were examined. For this reason, the following section is devoted to describing the LRV and its systems.

The lunar roving vehicle was built by the Boeing Company Aerospace Group. General Motors Delco Electronics Division was the major subcontractor. Simplicity of the design and operation and the lightest possible weight were the most important design considerations. The LRV is 122" long and 72" wide. It sits on a wheel base of 90". Figure 1 shows the LRV's enveloping dimensions. The total weight of the LRV with a crew of two astronauts and their life support systems and scientific equipment is 1560 pounds.

Each wheel is powered by a direct-current brush type electric motor, which operates at a nominal input voltage of 36 volts. Each motor is connected to the wheels through an 80:1 harmonic gear reducer. Power for the motors is suppied by two silver-zinc primary non-rechargable batteries. The wheels are made of a

zinc-coated piano wire mesh woven on an aluminum spin cast hub. Chevron shaped treads made of titanium are riveted to the mesh to enhance traction. The design will utilize a similar drive system with the exceptions being the use of rechargable secondary batteries and permanent magnet brushless motors.

Steering on the rover is accomplished by a double ackerman system on both the front and back wheels. Either system can be mechanically disconnected should a failure occur. Control of the steering can be accomplished either manually or electronically with the use of small servo-motors. The lunar forklift will also use an ackerman type steering arrangement with similar features.

The chassis of the rover is constructed from aluminum alloy 2219 tubing welded at the structural joints. A pair of triangular suspension arms connect the chassis to each wheel. Loads are transmitted through the arms to the chassis by torsion bars. Several features allow the rover to be folded into a compact package for transport. Vertical oscillations of the chassis are attenuated by a velocity-square damper connected between the chassis and each upper suspension arm.

The crew station equipment includes the seats, footrests, inboard handholds, armrests, floor panals, seat belts, fenders and toeholds.

The performance of the vehicle was excellent. The lunar terrain conditions in general were very similar to the expected conditions which the forklift will encounter. Acceleration was normally smooth with only very little slippage occuring under full throttle. Traction of the wheels was excellent uphill, downhill and during acceleration. Braking was positive except at speeds in excess of 5 km/hr(3 mph), but was less effective at higher speeds and when the vehicle was in a turn. Lateral skidding occurred during any hardover or maximum rate turn made at velocities greater than 5 km/hr. Since the forklift will never be required to make sharp turns at speeds above 5 km/hr a similar drive system can be used.

Vehicle tracks were prominent on the surface and very little variation in depth was observed when the bearing weight on all four wheels was equal. Deeper tracks, on the order of one to two inches in depth were observed as the vehicle negotiated steep slopes. However, there was no noticeable effect on the steering or control on the vehicle caused by driving on previously depositied tracks. This is good news because the forklift will operate in a limited area and will therefore encounter its own tracks quite often.

The lunar roving vehicle design proved to be quite adequate in negoiating the lunar surface. Therefore, its proven design characteristics cannot be overlooked

in the forklift design. The goal then is to develop a lunar fork type lifting device which follows closely the requirements of the LRV.

FORK LIFTING SYSTEM

Kinematics

The effects of gravity on the moon make it necessary to place several restrictions on the lift mechanism of the lunar forklift. First, and foremost is the distance to which the forks may extend forward of the front wheels. the lack of balast due to the reduced acceleration of gravity has made it necessary to place outriggers at the leading edge of the wheels and limit lifting to a vertical plane tangent to the front wheels. The outriggers together with "same plane" lift will allow maximum lift capacity with minimum balast. Also, this outrigger location will not hinder manipulation of the load upon initial approach, or upon placing the load on a scaffold or rack. In order to safeguard the forklift from over-extending and toppling forward, the position of the carriage must be monitored electronically. A simple monitoring system would coordinate the maximum boom extension with each degree of swing.

A second restriction on the lift mechanism involves the location of the load during transport. In order to distribute the load over all four wheels it must be placed as far back as possible. Contracting the boom to six feet and locating it's axis of rotation two feet forward of the rear wheels and five and a half feet

above the chassis places the load's center of gravity close to the front axles without raising the machine's center of gravity considerably (see fig. LM-1). Placement of the batteries and heat sink reservior behind the rear axles evens the weight distribution as much as necessary. Unloaded, the front wheels have minimum traction without leaving the ground. When transporting, stability against inertia effects can be maintained if the load is placed temporarily on the chassis and speeds are kept to a minimum over rough terrain. Stability of the load during the lifting operation is reasonable due to the slow flow rate of the hydraulic pump. With a minimum tract width of six and a half feet lateral stability is safe up to maximum extention and a lateral incline of 10 degrees.

HYDRAULICS

Mechanical power must be generated to produce movement of the lifting mechanism. To provide this power, electrical energy from the batteries must be converted to mechanical energy through the use of electric motors of some sort.

The configuration of the lifting system indicates that rotation and extension are required. The lifting forces must be applied smoothly to eliminate inertia effects which would tend to throw the load off the forks. The motion of the boom must be accurately controlled so that loads can be picked up and put down smoothly and accurately.

Several ideas were considered for producing these motions, all of which use an electric motor as the driving force. The motor provides rotational power, which can then be converted mechanically through gears, pulleys, or hydraulics to provide the forces needed for operation of the lift.

Two cable and pulley systems were considered. One system used the motor to wind or unwind the cable around a spool. The cable is routed over a series of pulleys to carry the force to the location where it is needed. In order to provide the force smoothly, an opposing

cable provides a force in the opposite directon. While lifting, the opposing cable is kept tight to keep the boom in a steady motion. The movement of the two cables must be synchronized to keep from having any slack in the opposing cable. It is difficult to keep the two cables coordinated because the speeds of the cables are not equal or constant as the boom rotates upward.

The second system used a continuous loop of cable powered by a motorized capstan. This required a large diameter capstan in order to produce enough friction on the cable to keep it from slipping. Also, it is difficult to eliminate the slack in the cable.

The extension action necessary is virtually impossible to create using cables and pulleys.

Gears could be used to provide both rotational and linear motion. However, due to the large amount of torque necessary to rotate the boom under load, either a very large motor or very complicated reduction gearing is needed. A very large motor is impractical because of weight and size. The gearing system would have to be very precisely made to avoid excessive backlash which leads to very imprecise motions. A complicated reduction gear train will also decrease the reliability of the system.

A rack and pinion type or power screw arrangement can provide the motions required. However, these require large amounts of space since the screw or rack

always remains the same size, whether in the "raised" or "lowered" position. Also, to avoid the build-up of the abrasive lunar dust, which would substantionally decrease the life of the system, the entire unit must be enclosed in a protective covering. The covering would have allow the movement of the nut or pinion along the length of the screw or rack making its design difficult.

Hydraulic cylinders are the best choice for for applications of this type. A hydraulic system requires the use of just one motor to power all of the motions needed. Hydraulic pumps have a high power to weight ratio and, when used with cylinders, power conversion efficiencies of up to 98% can be achieved with good design. Hydraulic cylinders are easily controlled and can be coordinated to produce precise movements.

The basic problem with using hydraulics is the evaporation of the fluid from the piston rod surface. When the rod is extended, a thin film of fluid remains on the rod. In the zero pressure environment of the moon, this thin film evaporates immediately. When the cylinder is then closed, the dry rod will destroy the seals in a short time. To prevent this a bellows type of covering is used to enclose the cylinder. The cover, sealed at both ends, can be lightly pressurized with an inert gas to avoid evaporation. The covering will also protect the cylinder from abrasive action caused by the accumulation of lunar dust. The hydraulic fluid also

needs to be kept at an acceptable temperature range. In order to be able to both heat or cool the fluid, a heat exchanger must be part of the apparatus.

The first step in designing the system is to calculate the forces needed to lift the various loads and the length of extension required. These can be found from the kinematic diagrams of the lifting system.

Next a system pressure must be chosen. The system pressures of most earthbound vehicles range from 1000 to 5000 pounds per square inch. The higher system pressures allow the use of smaller cylinders, which reduces the overall weight of the vehicle. However, higher pressures also require larger and more powerful pumps to maintain the system. The larger pumps will also require larger batteries, which will also add weight. Upon balancing these factors, a system pressure of 2000 pounds per square inch was chosen.

After the system pressure is known, the diameter of the internal bore of a cylinder required to apply a given forcecan be found by using the basic hydrostatic equation. Using this inside diameter, the system pressure, and the yeild strength of the material, the minimum wall thickness can be determined using Lame's Formula. Similarly, the end thicknesses can be calculated.

The diameter of the piston rods is dependant on the

force being exerted and the extended length of the rod. The rods are classified as thin columns subject to buckling. Euler's equation was found to hold for the sizes of the rods used in the design. The minimum rod diameter required to prevent buckling was then found.

The sizes of the cylinders were calculated for several materials using a computer program. The respective weights of each was determined to find the lightest configuration. Aluminum was chosen as the best suited material for this application.

In order to acheive motion of the desired speed, a flow rate of 150 cu in/min is needed. To avoid heat build up in the lines due to friction, the accepted limit on flow velocity is 5 ft/sec. This way, the pipes need not be cooled and the pump does not need to be ovesized to overcome the flow friction. From this we find the necessary inside bore of the pipe to be 0.23 inches. The thickness can then be found using the Barlow formula for the wall tubing. Again, aluminum was chosen as the material leading to a minimum wall thickness of 0.01 inches. However, the wall thickness is made to be 0.1 inches to protect the lines from envirnmental hazards.

To size the hydraulic pump, the horsepower output required was determined using the flow rate, density of the fluid, and the head. The head was determined using the system pressure and the density of the fluid. The

head was found to be 5200 feet. The horsepower required is 0.77. The hydraulic motor is sized at 1 hp with a minimum required efficiency of 77 percent.

MATERIALS

Aluminum 4032-T6 wrought alloy was chosen for the lift mechanism structural members because of it's high yield strength, small elongation under stress, heat resistance, and light-weight. Also to aid in reflection of radiation it can be polished to a high luster. Other materials considered were magnesium and titanium alloys and a graphite epoxy. The magnesium alloys were the lightest but have the lowest yields strengths. Titanium alloys are strong but heavy, and the graphite epoxy doesn't work well with torsional loads. Overall, the wrought aluminum alloys prove to be the best.

In the past, almost all space vehicles were constructed from metallic materials. Today's technology has introduced fiber-reinforced composite materials which have a higher specific strength, higher specific stiffness, and higher fatigue resistance. These new materials will probably be used to build nearly all structures in the future that require low weight, directional material properties, or high fatigue resistance.

The use of composite materials was not utilized in this design. Due to the limited time schedule, the detailed analysis of laminated composite structures was not feasible. The stress analysis of isotropic materials is much simpler than orthrotropic materials.

Therefore, the design used 4032-T6 aluminum alloy. The concept of a lunar forklift was developed, but not finalized.

Graphite-epoxy is commonly used in most aerospace applications beacause of its excellent properties. However, it cannot be used in outer space applications since the epoxy matrix begins to suffer serious degradation of physical and mechanical properties when in the presence of radiation. The fiber-reinforced composite material most likely to be used for space vehicles is a graphite-polymide. The graphite fibers are extremely strong, stiff, lightweight, and suited for high temperature applications. The polymide resins provide good protection of the fibers, are radiation resisitant and have a useful temperature of 700 degrees Farhenheit. This material would be ideally suited for outer space. It is only a projected material to be used; in the years to come, better materials will be developed to replace the ones presently used.

A computer program was written to aide in sizing laminated composite structures. Computer programs are a necessaity due to the large amount mathematical operations required in analyzing a composite member. Again, due only to the time factor, this program was not utilized in the current design.

CHASSIS SYSTEM

The chassis for the lunar forklift consists of a rectangular frame using 1" x 4" x .25" box beam. The two axles extend from the frame by one foot on each side to allow for wheel clearance when turning. A 1.5" diameter thin-walled section of tubing extends from each half axle to the frame at a 45 degree angle. At the front of the vehicle are two outriggers which prevent tipping over. They attach to the frame and extend out even with the front wheels. To support the load of the hydraulic lifting device, a 5" x 4" x 0.25" box beam is mounted across the width of the frame. Toward the rear of the hydraulics support, are two 2.5" x 2.5" x 0.25" channels that provide a mounting surface for the support trusses of the boom. A 29" x 54" x 0.25" reinforced plate is attached at the end of the chassis. The power supply and heat sink are mounted on the plate as ballast.

The material for the structure is 4032-T6 aluminum alloy. This material was selected because of its high strength and large elastic modulus. All members of the chassis are welded and not bolted. This was done to eliminate high stress concentrations and to transfer forces more uniformly. The structural members have sufficient size to provide ample welding area.

The forklift is designed to carry loads of up to

700 pounds on the moon. The weight of the forklift unloaded will be approxiamately 200 pounds on the moon. The load condition of the hydraulic lifting device support is 5600 pounds-force. The worst case on the frame is when two wheels support the entire weight of the fully loaded forklift. The loading would be approxiamately 450 pounds per wheel. At the mounting surface for the boom's support truss, there will be 1000 pounds total force. The chassis will withstand both bending and torsional loads with a maximum deflection of less than one-quarter inch.

Placing the power supplies and heat sink in the rear of the vehicle increase the moment behind the front wheels. The increased moment helps to prevent the vehicle from overturning when lifting a load. Forklifts on earth use increased ballast to balance the weight of the forks. Weight is a prime factor in the design of the lunar forklift; therefore, the distance is increased to create a large counter-balancing moment. Without this cantilever or extra ballast, the lifting capability would be decreased.

DRIVE AND CONTROL SYSTEMS

Power Source

The lunar forklift must have a source of power to drive the various motors and pumps on the vehicle. Several possibilities exist to power the forklift. The possible energy sources are solar arrays, fuel cells, thermal to electric convertors and batteries.

A solar array to convert the sun's energy directly to electricity would do the job. However, the array would have to be extremely large to provide enough power. With the solar array attached the vehicle would be unstable. Another possibility would be to run an extension cord to the forklift from a stationary array, but this would limit the mobility of the vehicle.

Fuel cells are currently used to power the shuttle. Fuel cell-electrolyzer units have the benefit of being able to produce many kilowatts for thousands of hours. These units are usually quite large. The size of the vehicle would have to be increased thus reducing the mobility.

Thermal power generating systems can use heat from virtually any source with the appropriate temperature. Nuclear reactors and radioisotopes are two commonly used heat sources. While thermal to electric energy convertors are a viable solution to the power supply

requirement of the forklift, they are large. The risk of injury to the astronaut is high should the device fail. Since the device would have to travel with the forklift, its structure would be subjected to various shock and vibrational loading in addition to the thermal shock that would occur on the moon. The possibility of a sudden catastrophic failure that would endanger the astronaut as well as the logistical problems of carrying the device around rule out thermal to electric convertors.

Many developments in the design of primary and rechargeable or secondary electrochemical storage batteries have reduced weight with increased life and energy density per unit weight. Three systems; nickel-cadmium, nickel-hydrogen and the alkali metal high-energy couples are the most promising for space applications. The alkali metal systems, sodium and lithium, are potentially the lightest in weight, but not the least expensive or long-lived. Nickel-cadmium batteries have been used extensively in recent years because of their good reliabilty and long life. Energy density and design life are the two most critical factors governing battery selection. Design life refers to the useful life of the battery. Energy density is the energy stored per unit weight and is expressed in watt-hours per kilogram. It is desirable in designing a forklift that rechargable batteries be used thus

reducing the number of batteries transported to the moon. Batteries can be recharged from a stationary solar array. Another advantage of rechargable batteries is that they allow the switching out of batteries between different machines being used on the moon. Since, they are rechargable greater confidence in their ability to power other equipment is realized if the equipment is designed to accept the batteries. Primary batteries on the other hand require close monitoring of the power discharged before they can be switched out. The alkali high-energy systems show the most promise. The nickel-cadmium system is approaching the limit of further development. Perhaps more significant advances will be made with the nickel-hydrogen system. At this point in time it is hard to say which system will be the most cost efficient however, it is known that the forklift should be powered by rechargable batteries. Two batteries, one of which acts as a backup to the other, will be used to power the forklift. One battery while provide 36 volts for eight hours and the backup will provide power for 30 minutes. The alkali metal group has the potential to give the highest energy density. Assuming that the CRC prediction of 90 A-hrs/kg energy density is valid, the forklift will require 620 pounds of batteries to power on eight hour shift.

MOTORS

Electric motors will play an important part in the operation of the forklift. The drive system consists of a motor and a 80:1 gear reduction at each wheel. Variable speed, variable torque, light weight, high efficiency are among the considerations for selecting a motor.

Permanent magnet (PM) brushless motors have several advantages. Their ability to perform in a thermal vacuum is well documented. They are also easy to control at high speeds with low currents. At low speeds PM motors require large currents to achieve the desired torques. High currents make DC motors difficult to control. Demagnetization of the permanent magnet is another important disadvantage, that must be considered and safety factors employed.

Direct current brush type motors can also be used. They have the advantage of being able to develop very high torques at low speeds. At high speeds, however, they develop a large counter EMF which must be overcome. To be as efficient as the PM brushless motor, the brush type motor must be about twice a heavy.

Each type of motor has certain advantages and diadvantages. In general, the PM motor operates better at high speeds while the series DC brush type motor is better at slow speeds. The brushless motor is more

efficient and generates less heat because no current is required by the rotor, therefore, no heat is generated. The disadvantage for the PM motor at low speeds can be eliminated by designing the motor so at high speeds only one quarter of the full number of turns in the motor are used. The high speed winding will then have a low back EMF. The low speed winding that consists of the full number of turns in the stator will be able to produce the high torque.

The ability of the PM motor to provide a controlled regenerative braking when the input command is reversed is an important advantage over the brush type motor. The performance of the brush type motor as a generator is unpredictable and thus requires external braking not required by the PM motor.

One other possibilty is the linear sychronous drive concept. A sketch of the concept is shown in figure LM-2. This arrangement does not require gear reduction or external braking. Heat transfer to the wheel shaft means no external cooling is needed.

The linear sychronous drive would be the optimum choice for the drive system. However, the technology is still in the development stage. The next best choice is the PM brushless motor and it is used in the design presented here for the wheel drive and the hydraulic pump.

WHEELS

Not only does the lunar surface itself create a problem in design of the forklift's wheel, extremely hot temperatures create problems also. With temperatures reaching 243 degrees Fahrenheit conventional rubber tires would melt.

One alternative to the rubber tire is a track type system similar to a bulldozer. Tracks provide excellent traction and manueverability. Their ability to turn and to climb over small obstacles are highly advantageous over the wheel. Tracks do provide a drawback in that they weigh alot and have numerous moving parts. Lubrication of the tracks would be hard to maintain, and eventually moon dust would cause deterioration of the tracks. The weight of the tracks and the manner in which they operate would require a considerable amount of torque from the drive motors. Although failure of the forklift to operate is not being anticipated, wheels would provide an easier method of towing or pushing in the event of a forklift breakdown in the field.

Another method of moving the vehicle consisted of two long cylinders of a large diameter. The cylinders would provide more contact area with the surface than would wheels. Cylinders would interfer with the desired construction of the boom though, eliminating this type of wheel.

The actual design of the forklift wheel is based on the Lunar Roving Vehicle's wheel. The wheels consist of a rim, a spun aluminum disc, a flexible woven wire outer frame, a stiff inner frame, tread and fasteners. The inner frame is essentially a stiff spring which limits the verticle and lateral deflection of the outer frame and absorbs impact loads.

The flexible outer wire frame is woven from music wire consisting of 800 interwoven .032 inch diameter wires in a .25 inch mesh. Each wire is crimped at fixed intrervals and then woven into a flat mesh. The meshes are interwoven to form a cylinder.

The tread strips are applied to the wire frame. Each strip is secured to the woven wire outer frame by a rivet which passes through the tread strip and the wire mesh and is headed over a washer on the back side of the mesh. A tubular spacer between the tread strip and the securing washer prevents clamping of the wire mesh.

The tread strips cover approximately 50% of the soil contacting surface. The wheels measure 48 inches in diameter and are 15 inches wide.

The aluminum alloy rims mount to a gear adapter which is free to rotate about the spindle. Each motor is mounted to the spindle and provides a pinion to drive the gear. The two-foot gears and four-inch pinions contain 384 teeth and 24 teeth respectively. Locking pins extend from the outter side of the rim to the inner

side of the gear. These pins provide for disengagement of the wheel and drive motor in case of power failure. In the event that the locking pins do have to be removed, bearings are placed in the rims for rotation about the gear adapter.

STEERING

The forklift is steered by both front and rear wheels in a double Ackerman arrangement. Ackerman steering denotes that the inner wheel turns a smaller radius circle than the outer wheel. Both front and rear wheels are capable of turning independently, but with both sets of wheels steerable, the vehicle has much more responsiveness.

The use of either front steering or rear steering only was considered, but due to the difference in weight distribution in the forklift loaded and unloaded, double steering proved to be the most logical. The center of gravity for the forklift unloaded lies between the center of the wheelbase and the rear wheels. Therefore there will be a much smaller downward force on the front wheels than on the rear ones. With only front wheel steering, turning may become difficult if the front wheels can't get a good grip on the lunar surface. With the forklift loaded, there should be no problem with lack of weight in the front end.

Similar to front wheel steering, rear wheel steering contains the problem of weight distribution also. Unloaded, the forklift can manuever with no difficulties. When a heavy load is applied to the forks, the weight shifts towards the front end leaving little force on the rear wheels. Depending on the

amount of the load, steering may be worse than the unloaded front wheel steering case.

To eliminate the problems of weight distribution in the single steering systems, both front and rear wheel steering systems were combined to provide adequate steering whether the forklift is loaded or unloaded.

Another consideration in steering design was an articulated steering system in which the frame was divided into two main sections. The sections were connected by a large king pin positioned upright between them about it which they rotated. Articulated steer enables all four wheels to be mounted on axles instead of spindles, since it is the frame sections which pivot and provide the steering and not the turning of the wheels. Although articulated steering has proved to be beneficial in heavy construction equipment, articulated steering was not chosen for use in the forklift for reasons in the frame design. The lifting structure of the forklift requires a one-piece frame on which to be mounted.

The final design of the steering system uses a rack and pinion setup positioned between each set of wheels. Powering them are two small motors. King pins are located at each corner of the frame for attachment of the wheels spindles, from which steering arms extend. Using the Ackerman steering principle, the steering arm protrusion forms an angle of 108 degrees with the

spindle axle. Thus when the outside wheel steering arm reaches 90 degrees with respect to the original spindle location, the inside wheel steering arm has well surpassed the 90 degree point. The steering linkages are fixed in length and therefore causes the inner wheel to be turned more.

Maximum travel of the steering linkages results in an outter wheel angle of 19 degrees and an inner wheel angle of 40 degrees. This gives the forklift a minimum turning radius of 13 feet.

THERMAL PROTECTION SYSTEMS

Heat Sink

A passive cooling system was selected to keep the hydraulic fluid within acceptable temperature limits. This passive cooling system also helps to keep the total weight of the forklift down. Keeping weight as low as possible is important, especially when the high cost of transporting mass to the moon is consisdered. The battery unit would have to be larger to accomodate a powered cooling system and this larger battery unit would add weight to the vehicle.

Essentially the cooling system for this forklift is composed of a hinged metallic block with five holes drilled through to allow the hydraulic lines to make five passes through the block. While the fluid is within the block, it will give up heat to the block. Over a period of time the block's temperature will approach the temperature of the fluid. Once the block gets to a certain temperature, it will be removed and a second block which has been previously cooled will be attached to the hydraulic lines. The hot block will be taken back to be cooled down so it can be used again. While the block is in place cooling the hydraulic fluid, it will be neccessary to inclose it in some type of housing painted with a reflective paint. This housing

will prevent the block from absorbing heat from the sun. Without a housing, the block will need to be changed much more often. The hydraulic reservoir will be provided with a radiation shielding.

The hydraulic fluid must be kept between 150-200 degrees Fahrenheit in order for the hydraulic system to operate efficiently. It is not critical to cool the electric motors down because they can still operate at high temperatures and they will be shaded from the sun's rays by a radiation shield.

The cooling block will come in two parts which are connected by two hinges. The block can be opened and closed onto the hydraulic lines. A latch will fasten the halves together with enough force to ensure a snug fit onto the hydraulic lines. The cooling effect will not be as great for a loose fit as it would be for a tight fit.

In the mathematical analysis of this cooling system, it is assumed that Newtonian heating will take place between the block and the hydraulic fluid. Newtonian heating is valid as long as the temperature throughout the block is uniform. Materials with a high value of thermal conductivity will support the assumption of Newtonian heating. Aluminum and copper appeared to be the best materials to use for the block, but aluminum will be used on the lunar forklift because it has a high value of thermal conductivity and it is

lightweight.

It is important to keep the thickness of the block between the outer surface and the hydraulic lines as small as possible. If the block is too thick, the assumption of Newtonian heating starts to break down. For a thick block, the regions which are farthest from hydraulic lines within the block will be cooler than the regions of the block which are closer to the lines. This condition creates a non-uniform temperature throughout the block thus disturbing the assumption of Newtonian heating. Even for a thin block, the temperature distribution will be non-uniform, but the variations of temperature would be negliable due to the large value of thermal conductivity.

The Reynold's number, evaluated for the flow of the hydraulic fluid within the block, was found to be lower than 2300. Laminar flow is assumed to be taking place. The heat-transfer coefficient for laminar flow in tubes for (RePrD/L) > 10 can be evaluated from an empirical correlation suggested by Sieder and Tate.

$$\overline{Nu}_D = 1.86 (Re_D Pr)^{0.33} (D/L)^{0.33} (\mu_b/\mu_s)^{0.14}$$

Where Ub is the viscosity at the bulk temperature and Us is the viscosity at the wall temperature. The heat-transfer coefficient was found from the following equation:

$$\bar{h}_c = K \overline{Nu}_D / D$$

By equating the rate of heat transfer by convection

to the block to the rate of change of the internal energy of the block. A function relating the temperature of the block to the time elapsed is derived:

$$T(t) = T_f - (T_f - T_i)\exp\left(-\frac{hA_s t}{mc}\right)$$

where Tf is the temperature of the fluid and Ti is the initial temperature of the block. The mass of the block is m and it's specific heat is c. The surface area of the section of the pipe running through the block is A and h is the heat-transfer coefficient. This function indicates how often the block will need to be changed.

A heat sink which weighs approximately 158 pounds will keep the hydraulic fluid within the desired temperature range. The block will need to be changed approximately once every two hours with continous operation if it is installed at an initial temperature of -50 degrees Fahreneit. When the block reaches a temperature of 160 degrees Fahrenheit, it should be changed because it will not be capable of cooling the fluid enough.

RADIATION SHEILDING

Several factors must be considered concerning thermal control of any lunar vehicle. Heat is gained from direct solar radiation, solar radiation reflected from the lunar surface, radiation emitted from the lunar surface, internally generated power, and radiation reflected or emitted from the shields.

The hydraulic fluid used in this fork lift must not exceed a temperature of two hundred degrees Fahrenheit. The fluid must be shielded from the environment in some way.

The electrical components must also be shielded from radiation. Noisy electrical discharges as well as degradation mechanisms which attack the surface and lattice structure of silicon may make electronics unreliable. The forward current output and recovery time of diodes is decreased. Additional problems occur with transister gain.

Layers of thin insulation may be used to help combat these problems. Multilayer insulations usually consist of very thin polyimide films that have aluminum or gold vacuum deposited on one or both sides. This type of thermal control would be unacceptable for anything that generates heat since this heat would have no outlet.

Thermal coatings and radiation shields are

effective enough to keep the surface temperature between sixty and ninety degrees Fahrenheit. This would be ideal for most fork lift applications.

The use of thermal coatings with very low ratios of solar absorptance to thermal emittance are quite effective. These coatings, however, may be damaged or degrade somewhat under radioactive exposure. In addition, the radiation from the hot lunar surface may still cause higher temperatures even with the coatings. White paint is the coating of choice. The chassis, boom, and all relatively non-heat-sensitive parts of the fork lift are coated with such a thermal barrier. The aluminum structure of the lift will not suffer great losses in strength or durability if the coating should fail. When the vehicle is illuminated from one side, however, a large temperature gradient may result from one side of the frame to the other,(from the sun lit side to the shaded side), even though the skin conductance is large.

Radiation shields can also be used as a method of thermal control for vehicles on the lunar surface. The shields can effectively isolate the vehicle from both solar and lunar radiation during the daytime. These shields would be used only in critical areas on the lunar fork lift. These areas would include motors, batteries, electronic equipment, as well as any exposed hydraulic reservoirs, lines or pistons.

INSTRUMENTATION

The lunar forklift is controlled by means of a remote unit warn by the astronaut. This lets the operator position himself in the best possible viewing position during operation. In addition, weight and balance considerations were reduced during the design process. The remote control unit is warn on the stomach of the operator and controlled by six levers (joy sticks). It straps on and is separately powered, with a viewing panel extending from the base by flexible metal tubes. The viewing panel displays vital information about battery power and motor temperature. The unit is enclosed in aluminum and must be well shielded from radiation. Radiation will begin to destroy the semiconductor characteristics as well as cause electrical discharges which would interfere with the transmission of the data from the remote unit. The aluminum casing must also be completely sealed. Dust boots made of space suit material cover the base of the joy sticks to keep lunar dust out. The signals from the control transmitter are received by the central microcomputer aboard the forklift.

Power from the batteries leads directly into circuit breakers and into the microcomputer control box. The circuit breakers provide circuit protection as well as a means of shutting off the forklift power. The

microcomputer controls all aspects of the forklifts operation. This unit is also sealed and shielded. The one piece design allows the computer to be replaced with little difficulty should any malfunction occur.

The hydraulic cylinder control unit also controls the hydraulic pump, to keep the pressure at operational levels without the pump running continuously. The cylinder control unit is powered and controlled by the central computer by commands transmitted by the operator.

Heaters for the hydraulic cylinders are provided so hydraulic fluid will not leak when they get cold. A temperature controlled relay switch turns the heaters on.

The speed indicator activates the reverse light and a low power transmitter, as a warning when it senses the wheel rotating backwards. This control procedure takes place in the central microcomputer housing to minimize the chance of failure. Deceleration will cause the speed sensing device to activate brake lights. This also means brake lights will appear during some turning procedures.

The microcomputer, batteries and hydraulic pump are located at the rear of the lift to provide ballast. The frame is made of aluminum, so the chassis can be used as a ground. This greatly simplifies wiring and reliability.

CONCLUSIONS

The lunar forklift outlined here is expected to meet all the design criteron set forth in the problem statement. A test bed to simulate the moon's environment can be constructed to qualify the design. By supporting 5/6 of the forklift's weight with cables, the effect of gravity on stability can be studied. The hydrualic cylinders must be qualified for use at elevated temperatures in a vacuum by testing on earth in a vacuum or in space on the shuttle.

Several failsafe mechanisms are built into the forklift to insure its safe operation. A spare battery is provided to power the motors and related electronics in case the main battery fails. This backup system woulo allow the astronaut to finish the present task and return to the base.

Double action hydraulic cylinders prevent raised loads from falling so fast that they might crush anyone underneath them. Instead, the load would descend slowly, allowing the astronaut time to get out of the way. Values in the hydraulic fluid lines, that close when a sudden pressure drop is experienced, prevent fluid from being evacuated from the cylinders. This precaution provides protection from a rupture of the hydraulic lines. A hand crank on the pump allows the astronaut to manually raise and lower the load should

the pump fail thus allowing the present task to be completed before having to return to the base.

Locking pins in each wheel allow any wheel to be disconnected should a failure occur in the drive system. The front and rear steering assemblies can also be disengaged should failure occur. Manual steering with a hand crank is also provided in case the steering electronics fail.

Finally, thermal relays that shut down all the forklifts systems by disconnecting the battery are provided. These switches monitor the temperature of the batteries, motors and cooling system and prevent these systems from overheating during operation.

REFERENCES

Askeland, D.R., The Science and Engineering of Materials Wadsworth, Belmont, Ca., 1984.

Baumeister, T., Editor, Mark's Handbook for Mechanical Engineers, McGraw-Hill Book Company, New York, 1978.

Blodgett, Omer W., Design of Weldments, The James F. Lincoln Arc Welding Foundation, Cleveland, Ohio, 1976.

Boresi, A.P. and O.M. Sidebottom, Advanced Mechanics of Materials, 4th Edition, John Wiley and Sons, New York, 1985.

Bruhn, E.F., Analysis and Design of Flight Vehicle Structures, S.R. Jacobs & Associates, Inc., 1973.

Costes, N.C., J.E. Farmer and E.B. George, Mobility Performance of the Lunar Roving Vehicle, NASA Report # TR R-401, 1972.

Dieter, G., Engineering Design, McGraw-Hill Book Company, New York, 1983.

Hord, R.M., CRC Handbook of Space and Technology: Status and Projections, CRC Press, Boca Raton, FL., 1985.

Hydraulic Handbook, Trade and Technical Press Ltd., Morden, Surrey, England, 1967.

Jones, C.S. and Frank J. Nola, Mobility Systems Activity for Lunar Rovers at MSFC, NASA Report # TM X-64623, 1971.

Jones, F.R. and W.H. Aldred, Farm Power and Tractors, McGraw-Hill, New York, 1980.

Jones, R.M., Mechanics of Composite Materials, McGraw-Hill Book Company, New York, 1975.

Kreith, Frank and W.Z Black, Basic Heat Transfer, Harper and Row Publishers, New York, 1980.

Lienhard, John H., A Heat Transfer Text Book, Prentice Hall, Englewood Cliffs, NJ., 1981

McKinley, Joe W., Fundamentals of Stress Analysis, Matrix Publishers, Inc., Beaverton, Oregon, 1979.

NASA Astronautics Design Manual, 1970.

APPENDIX A
Design Analysis (Calculations)

CHASSIS / FRAME

MATERIAL AL. ALLOY 4032-T6
U_T = 55 KSI Y = 46 KSI ELONG = 9%
E = 10.3×10^6 SHEAR = 41 KSI

LOADING LOAD + VEHICLE + BALL = TOTAL WEIGHT

$\frac{4200}{6} + \frac{300}{6} + \frac{820}{6} = 900$ lb (MOON)
(WORST CASE: 2 WHEEL TOUCHING)

BENDING $\theta = \frac{MY}{I}$

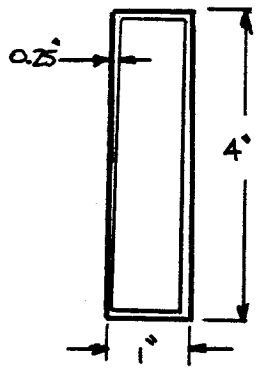

$M = 93" \times (\frac{900}{2}) = 41{,}850$ lb

$Y = 2"$

$I = \frac{BH^3 - bh^3}{12} = \frac{1(4)^3 - (.5)(3.5)^3}{12}$

$I = 3.6$ in^4

$\theta = \frac{(41{,}850)(2)}{3.6} = 23{,}250$ PSI

$MS = \frac{46{,}000}{(1.5)(23{,}250)} - 1 = \boxed{+0.32}$

NOTE: ANALYSIS PERFORMED ON 1"x4"x.25" BOX BEAM. POSITIVE MARGINS OF SAFETY INDICATE THAT THE 2"x4"x.25" BOX WILL NOT FAIL UNDER LESSER LOAD

DEFLECTION $\gamma = \frac{Fl^3}{48EI} = \frac{(450)(93)^3}{48(10.3 \times 10^6)(3.6)} = 0.2$ IN

STRAIN $\epsilon = \frac{\theta}{E} = \frac{23{,}250}{10.3 \times 10^6} = 0.2\% << 9\%$
GOOD

TORSION (LONG. MEMBER W/ NO BRACING)

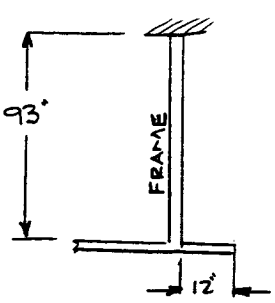

$\tau_{MAX} = \frac{T}{\omega t^2}(3 - 1.8\, t/\omega)$ (REF. TIMOSHENKO)

$\tau_{MAX} = \frac{(\frac{900}{2})12"}{4(1)^2}(3 - 1.8(1/4)) = 3450$ PSI

$MS = \frac{41{,}000}{(1.5)(3450)} - 1 = \boxed{+6.9}$

CHASSIS / HYDRAULIC SUPPORT

MATERIAL AL ALLOY 4032-T6
U_T = 55 KSI Y = 46 KSI S = 41 KSI E = 10.3×10^6
ELONG = 9 %

LOAD 5600 lb IN CENTER

90° VERTICAL

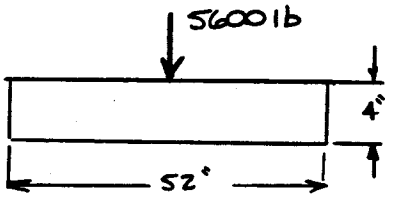

2 EXTREME LOAD CASES:

0° HORIZONTAL

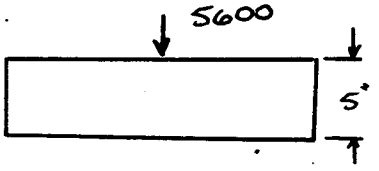

BENDING

1) 90° $\theta = \frac{MY}{I}$ $M = (5600)(26) = 145{,}600$ in lb

$Y = 2"$

$I = \frac{BH^3 - bh^3}{12} = \frac{5(4)^3 - 4.5(3.5)^3}{12} = 10.6$ in^4

$\theta = \frac{145{,}600(2)}{10.6} = 27{,}470$ PSI

$MS = \frac{46{,}000}{(1.5)(27{,}470)} - 1 =$ **+0.13**

2) 0° $\theta = \frac{MY}{I}$ $M = 145{,}600$
$Y = 2.5$ in
$I = \frac{4(5)^3 - 3.5(4.5)^3}{12} = 15.1$ in^4

$\theta = \frac{145{,}600(2.5)}{15.1} = 24{,}100$ PSI

$MS = \frac{46{,}000}{(1.5)(24{,}100)} - 1 =$ **+0.27**

DEFLECTION $\gamma = \frac{Fl^3}{48EI} = \frac{5600(52)^3}{48(10.3 \times 10^6)(10.6)} = 0.14$ in

STRAIN $\epsilon = \frac{\theta}{E} = \frac{27{,}470}{10.3 \times 10^6} = 0.3\% \ll 9\%$
GOOD

CHASSIS / TRUSS SUPPORT

MATERIAL 4032-T6 ALUMINUM ALLOY
U_T = 55 KSI Y = 46 KSI E = 10.3×10^6 ELONG = 9%

LOADING 500 lb

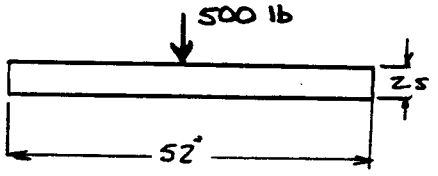

BENDING $\theta = \frac{MY}{I}$

M = 500 (26") = 13,000 in lb
Y = 1.25"
I = .02525 $(2.5)^4$ (REF. BLODGETT)
= .99 in^4

$$\theta = \frac{(13{,}000)(1.25)}{.99} = 16{,}500 \text{ PSI}$$

$$MS = \frac{46{,}000}{(1.5)(16{,}500)} - 1 = \boxed{+0.86}$$

DEFLECTION $\gamma = \frac{Fl^3}{48EI} = \frac{500(52)^3}{48(10.3 \times 10^6)(1)} = 0.14$ IN

STRAIN $\varepsilon = \frac{\theta}{E} = \frac{16{,}500}{10.3 \times 10^6} = .16\% < 9\%$

GOOD

CHASSIS / BALLAST PLATE

MATERIAL 4032-T6 ALUMINUM ALLOY
U_T = 55 KSI Y = 46 KSI E = 10.3×10^6 ELONG = 9 %

LOAD 135 lb

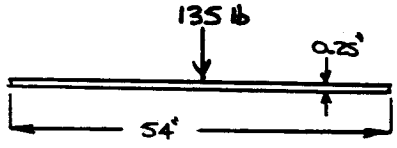

BENDING $\theta = \frac{MY}{I}$

$M = (135\ lb)(27") = 3650\ in\text{-}lb$

$Y = 0.125$

$I = \frac{bh^3}{12} = \frac{29(.25)^3}{12} = .04\ in^4$

$\theta = \frac{(3650)(.125)}{.04} = 11{,}400\ PSI$

$MS = \frac{46{,}000}{(1.5)(11{,}400)} - 1 = \boxed{+1.7}$

DEFLECTION $\gamma = \frac{Fl^3}{48EI} = \frac{135\,(24)^3}{48(10.3 \times 10^6)(.04)} = .1\ IN$

STRAIN $\varepsilon = \frac{\theta}{E} = \frac{11{,}400}{10.3 \times 10^6} = .11\% << 9\%$

GOOD

CHASSIS WEIGHT ANALYSIS

2	93"	4" x 1" x 0.25"	BOX BEAM	(FRAME)	419 in^3
1	78"	4" x 1" x 0.25"	BOX BEAM	(FRAME)	176 in^3
1	78"	4" X 2" x 0.25"	BOX BEAM	(FRAME)	215 in^3
1	52"	4" x 5" x 0.25"	BOX BEAM	(HYDR. SUPP.)	221 in^3
2	52"	2.5" x 2.5" x 0.25"	CHANNEL	(TRUSS SUPP.)	195 in^3
4	14"	1.5" x 0.25"	TUBING	(AXLE BRACE)	55 in^3
1		54" x 39" x 0.25"	PLATE	(BALLAST SUPP.)	392 in^3
				TOTAL	1675 in^3

DENSITY OF ALUMINUM = 0.1 lb/in^3

TOTAL WEIGHT ON EARTH = 167.5 lb

TOTAL WEIGHT ON MOON = 28 lb

BOX CROSS SECTIONS

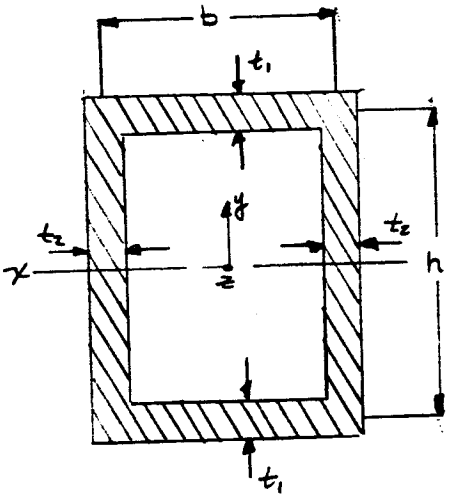

HOLLOW THIN-WALL CROSS SECTION OF RECTANGULAR SHAPE WITH DIMENSIONS RESTRICTED TO THE CONDITION

$$bt_1 = ht_2$$

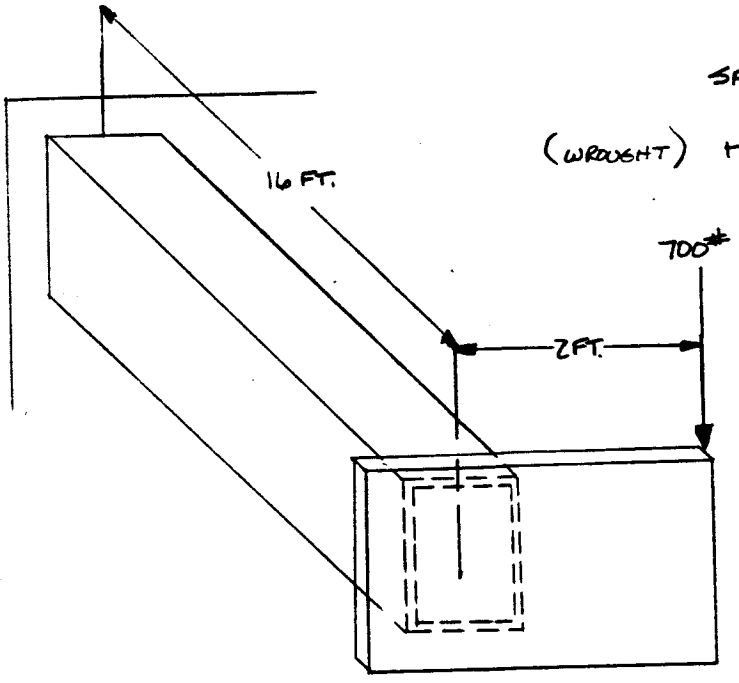

SAFETY FACTOR = 4.0

(WROUGHT) HEAT TREATABLE 4032-T6 ALLOY

12% Si - 1% Mg - 87% Al

S_y = 46 kpsi

S_T = 55 kpsi

% ELONG = 9

E = 10×10^6 psi

MOMENT OF INERTIA

$$I_x = \frac{(b+t_2)(h+t_1)^3}{12} - \frac{(b-t_2)(h-t_1)^3}{12}$$

AREA

$$A = (b+t_2)(h+t_1) - (b-t_2)(h-t_1)$$

LET $h = 6$ IN, $b = 4$ IN, $t_2 = 0.25$ IN, $t_1 = .375$

$$I_x = \frac{4.25(6.375)^3}{12} - \frac{3.75(5.625)^3}{12} = \underline{36.14} \text{ IN}^4$$

$$A = (4.25)(6.375) - 3.75(5.625) = \underline{6.00} \text{ IN}^2$$

THE MAXIMUM BENDING STRESS σ_z,

$$\sigma_z = (SF)\frac{Mc}{I_x} = \frac{(4.0)(700)(16)(12)(3)}{36.14} \text{ lb}_f \frac{\text{IN}^4}{\text{IN}^4 2}$$

$$\boxed{\sigma_z = 44.63 \text{ ksi}} < 46 \text{ ksi} \quad \checkmark$$

THE MAXIMUM SHEARING STRESS DUE TO TORQUE T,

$$\tau = \frac{(SF)T}{2A t_{min}} = \frac{4.0(700)(2)(12)}{2(6)(4)(.25)}$$

$$\tau = \underline{5.60 \text{ ksi}}$$

THE MAXIMUM SHEARING STRESS τ_{MAX},

$$\tau_{MAX} = \sqrt{\left(\frac{\sigma_z}{2}\right)^2 + \tau^2} = \sqrt{\left(\frac{44.63}{2}\right)^2 + 5.6^2}$$

$$\boxed{\tau_{MAX} = 23.00 \text{ ksi}} < 46 \text{ ksi} \quad \checkmark$$

FROM THE ANALYSIS OF THE BOX CROSS SECTION THE SECTION MUST HAVE A HEIGHT OF 6 IN., A WIDTH OF 4 IN., A TOP AND BOTTOM FLANGE THICKNESS OF 0.375 IN., AND A SIDE FLANGE THICKNESS OF 0.25 IN. IN ORDER TO WITHSTAND THE 700 lb_f LOAD WITH A SAFETY FACTOR OF 4.0 TO OFFSET TEMPERATURE EFFECTS.

USING THE STRAIN ENERGY OF THE FIRST SECTION THE DEFLECTION AT THE 6 FT. MARK ON THE BOOM WILL BE (NEGLECTING SHEAR AND NORMAL FORCES):

THE STRAIN ENERGY,

$$U_m = \int \frac{M_x^2}{2EI_x}\, dz$$

WILL BE USED WITH CASTIGLIANO'S THEOREM.

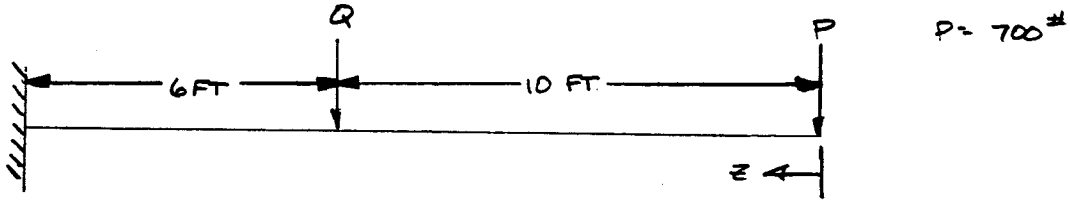

$$M_x = Pz \qquad 0 < z < 10$$

$$= Pz + Q(z-10) \qquad 10 < z < 16$$

$$\frac{\partial M_x}{\partial Q} = (z-10)$$

$$\delta_Q = \int_0^{10} \frac{Pz}{EI_x}(z-10)\,dz = \frac{P}{EI_x}\int_0^{10}(z^2-10z)\,dz$$

$$= \frac{P}{EI_x}\left(z^3 - \frac{10z^2}{2}\right)_0^{10} = 500\,\frac{P}{EI_x}$$

$$\delta_Q = \frac{500\,(700)}{10\times10^6\,(36.14)}$$

$\boxed{\delta_Q = 0.001 \text{ IN.}}$ DEFLECTION OF 1ST SECTION

SIZING OF CONCENTRIC CROSS SECTION

LET $h = 4.5$ IN., $b = 3.00$ IN, $t_2 = .25$, $t_1 = .375$ IN

$$I_{x_2} = \frac{3.25\,(4.875)^3}{12} - \frac{2.75\,(4.125)^3}{12} = 15.29 \text{ IN.}^4$$

$$A_2 = 3.25\,(4.875) - 2.75\,(4.125) = 4.50 \text{ IN}^2$$

THE MAX. BENDING STRESS σ_{z_2},

$$\sigma_{z_2} = \frac{4.0\,(700)(10)(12)(2.25)}{15.29} = 49.44 \text{ ksi}$$

USING THIS CROSS SECTION REDUCES THE SAFETY FACTOR TO 3.72.

THE MAX. SHEARING STRESS DUE TO TORQUE T,

$$\tau = \frac{(3.72)(1400)(12)}{2(4.5)(.25)} = \boxed{27.78 \text{ ksi}}$$

THE MAX. SHEAR STRESS,

$$\tau_{MAX} = \sqrt{\left(\frac{46}{2}\right)^2 + 27.78^2} = \boxed{36.06 \text{ ksi}}$$

DEFLECTION OF SECOND SECTION

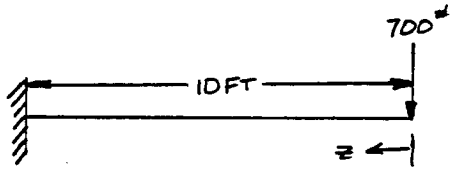

$$M_x = 700z \qquad \frac{\partial M}{\partial F} = 700$$

$$q_F = \int_0^{10} \frac{700^2 z}{EI_x} = \frac{140{,}000 z^2}{2EI_x}$$

$$I_x = \frac{3.25(4.875)^3}{12} - \frac{2.75(4.125)^3}{12} = 15.29$$

$$q_F = \frac{70{,}000(10)^2}{2(10\times10^6)(15.29)} = \boxed{0.023 \text{ IN}}$$

TWIST OF CIRCULAR SECTION OF SIMILIAR SIZE

$$\theta = \frac{T}{Gr} = \frac{36.06 \times 10^3}{77.5 \times 10^9 (1.5)} = \text{SMALL}$$

BOOM TRUSS SUPPORT CALCULATIONS

MAX. VERTICAL LOAD (TOTAL) = 1000 lbf (ESTIMATE)

SAFETY FACTOR = 4.0

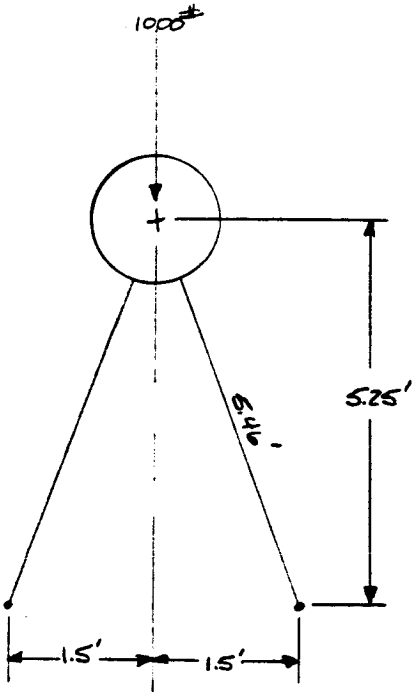

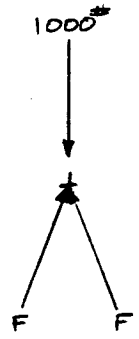

$\Sigma F_y = 2(1000) - 2F(.962) = 0$

$F = 1040^{\#}$

$$\sigma = \frac{F}{A} \Rightarrow A = \frac{1040}{46 \times 10^3} = 0.027 \text{ IN}^2$$

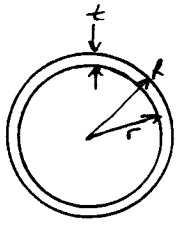

LET $R = 1.0$ IN $\quad t = \frac{3}{16}$ IN $\quad r = .8125$ IN

$A = \pi (1^2 - .8125^2) = 1.068 \text{ IN}^2$

BUCKLING LOAD (COLUMNS)

$$P_{cr} = \frac{\pi^2 E I}{L^2} \qquad I = \frac{\pi}{4}\left(1^4 - .8125^4\right) = 0.443\ in^4$$

$$P_{cr} = \frac{\pi^2 (10 \times 10^6)(.443)}{6.46^2 (144)} = \underline{10{,}200\ lb_f}$$

$P_{cr} = 4232\ lb_f$ for wall thickness of $\frac{1}{8}"$

$\therefore$ NO DANGER OF BUCKLING

LATERAL LOAD ON TRUSS ON 10° INCLINE

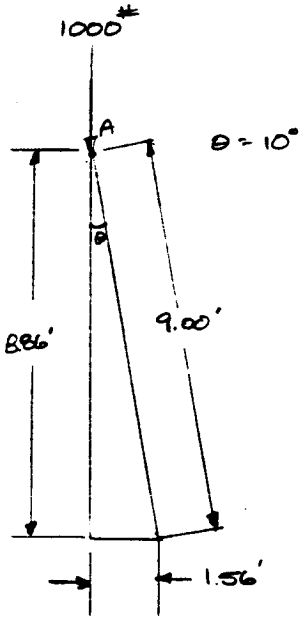

$\sum M_A = 1000(1.56) = 1{,}560\ ft\text{-}lb_f$

NATIONAL
42-381 50 SHEETS 5 SQUARE
42-382 100 SHEETS 5 SQUARE
42-389 200 SHEETS 5 SQUARE

(Fig. Lm-1) SCHEMATIC: LIFT MECHANISM - INITIAL LIFT

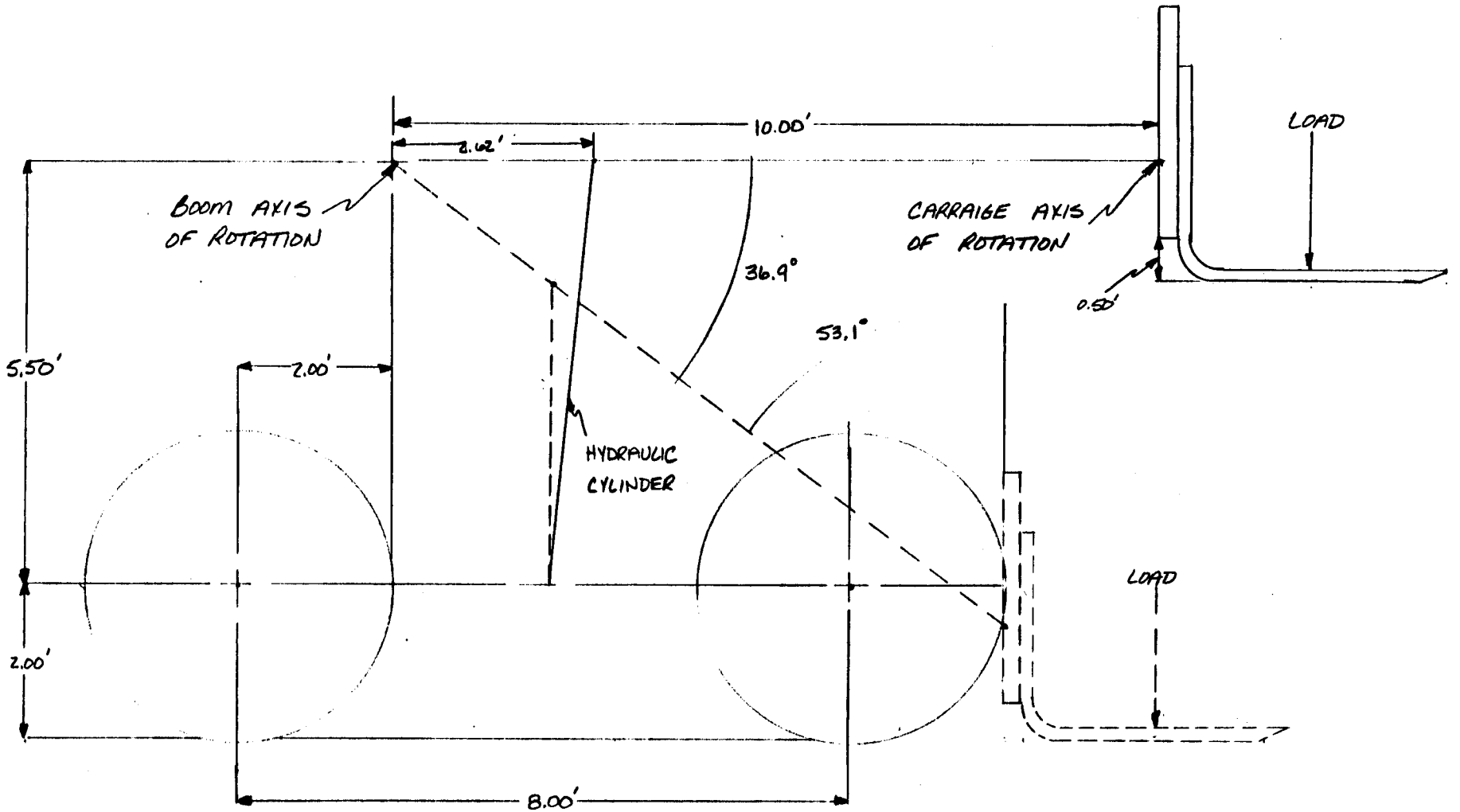

SCALE: $\frac{1}{2}$" = 1'

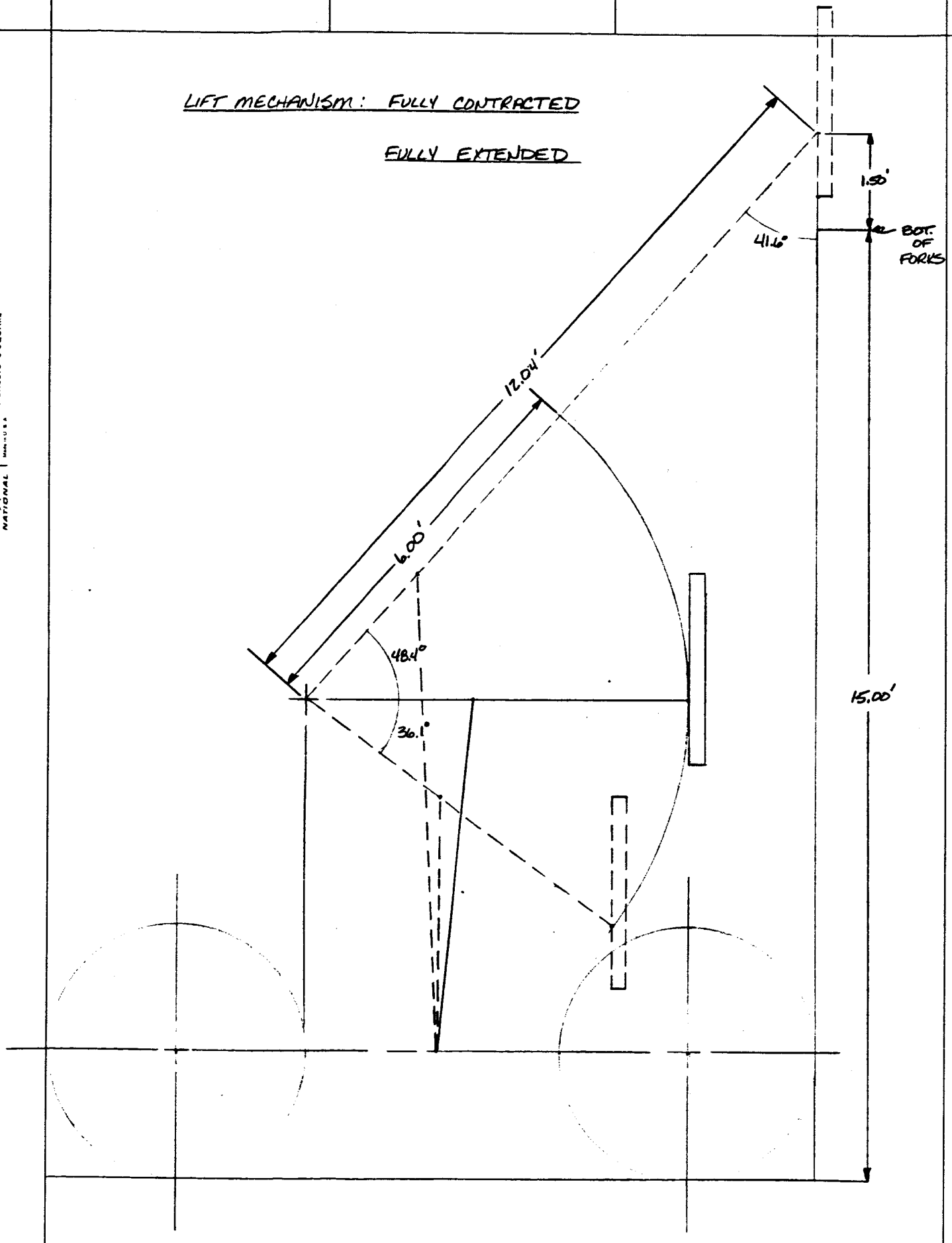
LIFT MECHANISM: FULLY CONTRACTED
FULLY EXTENDED
1.50'
BOT. OF FORKS
41.6°
12.04'
6.00'
48.4°
36.1°
15.00'

NATIONAL
42-381 50 SHEETS 5 SQUARE
42-382 100 SHEETS 5 SQUARE
42-389 200 SHEETS 5 SQUARE

CARRAIGE ANGULAR DISPLACEMENT

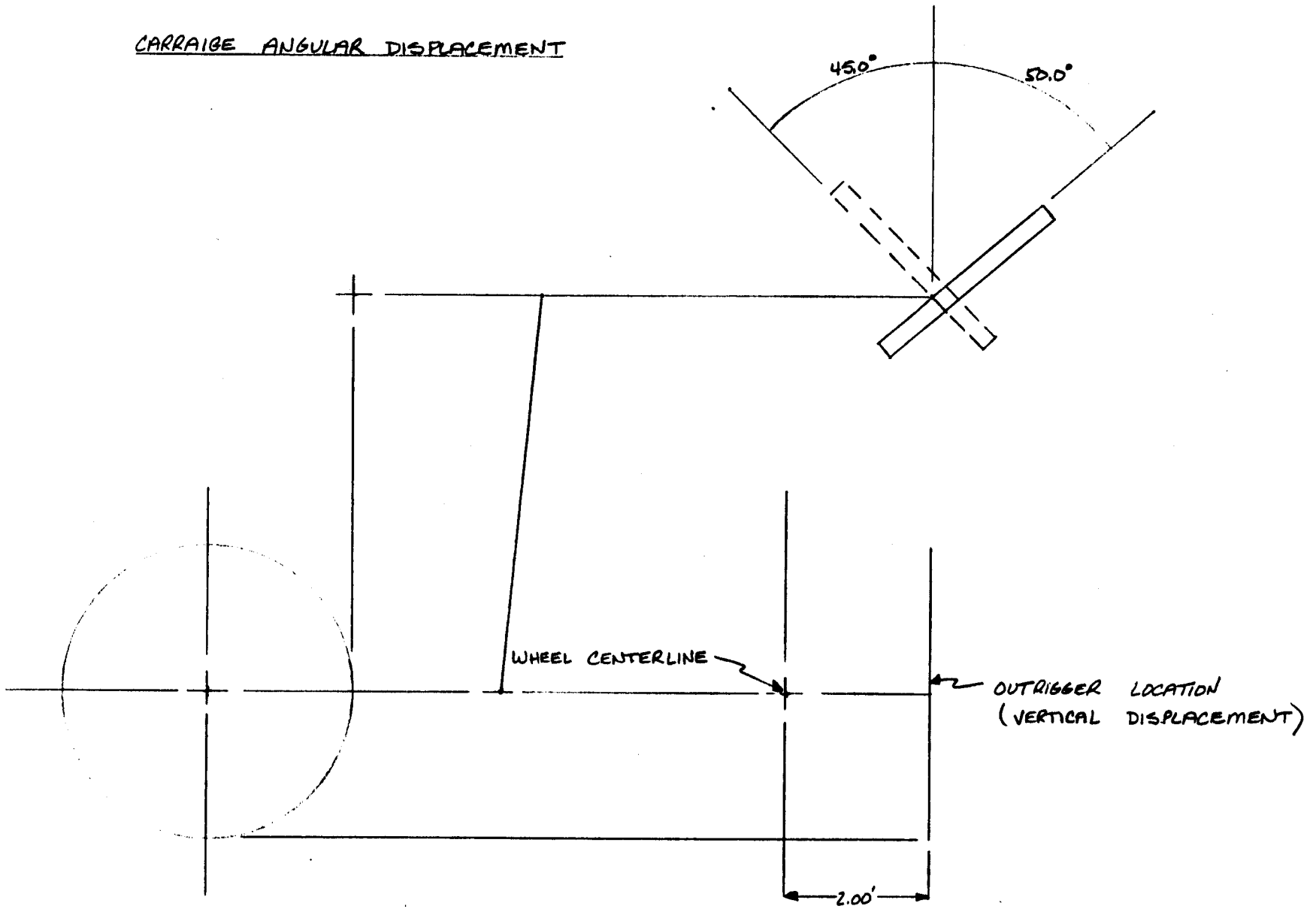

LIFT MECHANISM WEIGHT ANALYSIS

Boom:

OUTER:

$$8.5 \text{ ft.} \times \frac{12 \text{ in}}{\text{ft}} \times \left[2(0.25)(6.38) + 2(.375)(4.25)\right] \times 0.1 \frac{\text{lb}_f}{\text{in}^3} = 65.1 \text{ lb}_f$$

INNER: $9.33(12) \times \left[2(.25)(4.88) + 2(.375)(2.75)\right] \times (0.1) = 50.4 \text{ lb}_f$

TRUSS:

$8(6 \times 1/4 \times 2.5) \times 0.1 = 3 \text{ lb}_f$

$4\left(\pi\left(\frac{2^2 - 1.75^2}{4}\right)\right)(4.88)(0.1)(12) = 17.4 \text{ lb}_f$

$4\left(\pi\left(\frac{2^2 - 1.75^2}{4}\right)\right)(5.01)(.1)(12) = 17.7 \text{ lb}_f$

$2\pi\left(\frac{5.5^2 - 5.0^2}{4}\right)(6)(.1) = 4.9 \text{ lb}_f$

$2(6)(5.5)(0.25)(0.1) = 1.6 \text{ lb}_f$

$4\left[6^2 - \frac{\pi}{2}\left(\frac{5.5}{4}\right)^2\right](0.25)(0.1) = 2.4 \text{ lb}_f$

$2(2)(5.5)(.25)(.1) = 0.5 \text{ lb}_f$

TRUSS TOTAL = 44.5 lb$_f$

CARRIAGE AND FORK ASSEMBLY

$26(12)(3)(0.25)(0.1) = 23.4 \text{ lb}_f$

$2(4)(12)(6)(0.25)(0.1) = 14.4 \text{ lb}_f$

FORKS: $4(7.5)(12)(2)(1.5)(0.1) + 16(2)(6)(0.25)(0.1) = \underline{112.8}\ lb_f$

LIFT MECHANISM WEIGHT: **310 lb_f**

C.G. 2.5 FT. BEHIND OUTRIGGER

OR 0.5 BEHIND AXLE OF FRONT WHEEL

42 381 50 SHEETS 5 SQUARE
42 382 100 SHEETS 5 SQUARE
42 389 200 SHEETS 5 SQUARE
NATIONAL

STEERING

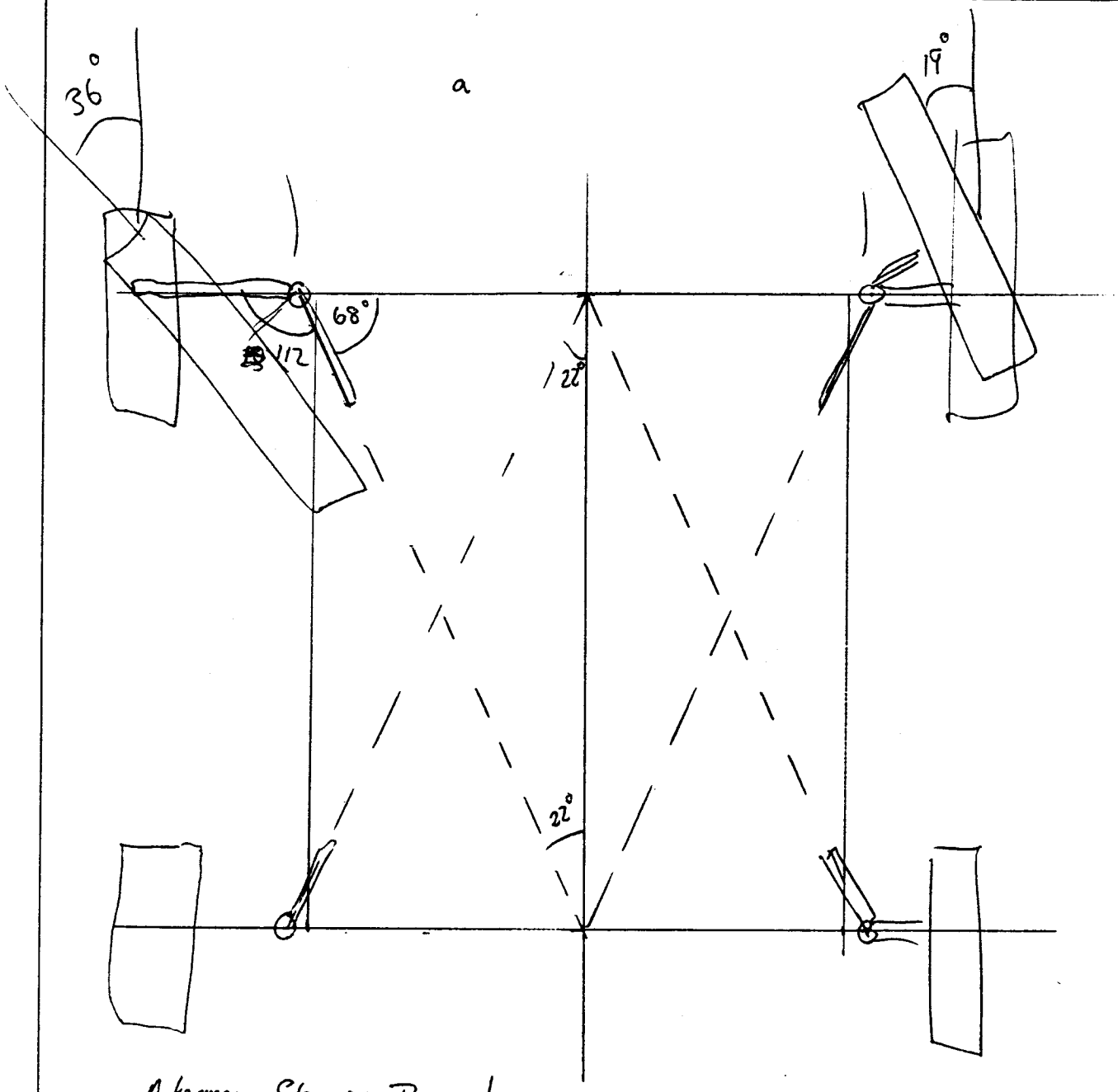

Ackerman Steering Principle

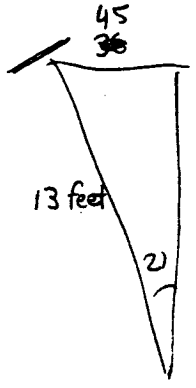

Design of Round Column

$P_{cr} = nP$

P = actual load
n = 2 to 8 (3)
l = length
C = end constant = 1 (fixed, round)
E = mod. of elas.
S_y = yield strength

$I = \frac{\pi d^4}{64}$ (moment of inertia)

$k = \frac{d}{4}$ (radius of gyration)

$\left(\frac{l}{k}\right)_1 = \sqrt{\frac{2\pi^2 C E}{S_y}}$

$I = \frac{P_{cr} l^2}{C \pi^2 E}$ (EULER TO BACK OUT I)

$d = \left(\frac{64 I}{\pi}\right)^{1/4}$ (DEF OF I TO GET DIA)

is $\frac{4l}{d} - \left(\frac{l}{k}\right)_1 \geq 0 \Rightarrow$ (CHECK IF EULER HOLDS) $\Rightarrow$ YES $\Rightarrow$ d OK

↓ NO

$d = 2\sqrt{\frac{P_{cr}}{\pi S_y} + \frac{S_y l^2}{C \pi^2 E}}$ (JOHNSON EQUATION)

50 SHEETS 5 SQUARE
42-382 100 SHEETS 3 SQUARE
42-389 200 SHEETS 3 SQUARE
NATIONAL

CYLINDER THICKNESS

$$t = \frac{D}{2}\left(\sqrt{\frac{S+P}{S-P}} - 1\right)$$

- LAME' formula.

S = MAX PERM. STRESS
P = INTERNAL PRESSURE
D = OUTER DIAMETER
t = THICKNESS OF WALL
d = INNER DIAMETER OF CYLINDER

$$D = d + 2t$$

$$t = \frac{d+2t}{2}\left(\sqrt{\frac{S+P}{S-P}} - 1\right)$$

$$\frac{2t}{(\Gamma - 1)} = d + 2t$$

$$\frac{1}{(\Gamma - 1)} = \frac{d + 2t}{2t}$$

$$\frac{1}{(\Gamma - 1)} = \frac{d}{2t} + 1$$

$$\left(\frac{1}{\Gamma - 1} - 1\right) = \frac{d}{2t}$$

$$t = \frac{d}{2\left(\frac{1}{(\Gamma-1)} - 1\right)}$$

$$t = \frac{d}{2}\left(\frac{1}{\frac{1-(\Gamma-1)}{(\Gamma-1)}}\right)$$

$$t = \frac{d}{2}\left(\frac{1}{\frac{2-\Gamma}{\Gamma-1}}\right)$$

$$t = \frac{d}{2}\left(\frac{\Gamma-1}{2-\Gamma}\right)$$

$$\boxed{t = \frac{d}{2}\left(\frac{\sqrt{\frac{S+P}{S-P}} - 1}{2 - \sqrt{\frac{S+P}{S-P}}}\right)}$$

INNER BORE OF CYLINDER

SYSTEM PRESSURE = 2000 lbs/in^2

LOAD = nP

AREA × 2000 = LOAD

$2000\ \pi r^2 = nP$

$d = 2\sqrt{\frac{LOAD}{2000\pi}}$

$d = 2\sqrt{\frac{nP}{2000\pi}}$

CYLINDER END THICKNESS

$t = 0.405\, D \sqrt{\frac{P}{S}}$

D = OUTSIDE DIAMETER
P = INTERNAL PRESSURE
S = MAX MATERIAL STRESS

50 SHEETS 5 SQUARE
42-382 100 SHEETS 5 SQUARE
42-389 200 SHEETS 5 SQUARE
NATIONAL

Pipe Size

$$150 \frac{\text{cu in}}{\text{min}} \times \frac{1 \text{ min}}{60 \text{ sec}} = 2.5 \frac{\text{in}^3}{\text{sec}}$$

$\text{Area} = \pi r^2$ Max velocity $= 5 \frac{\text{ft}}{\text{sec}} \times \frac{12 \text{ in}}{1 \text{ ft}} = 60 \frac{\text{in}}{\text{sec}}$

Flow rate = Area × Velocity

$$25 \frac{\text{in}^3}{\text{sec}} = \pi r^2 \text{ in}^2 \times 60 \frac{\text{in}}{\text{sec}}$$

$$\sqrt{\frac{2.5}{\pi(60)}} = r$$

$r = .115''$

$d_{min} = 2(.115) = 0.23''$

Barlow Formula $n = 5$ Aluminum $S_y = 46000$

$$\frac{d}{t} = \frac{2 S_y}{P(5)} =$$

$$\frac{1}{t} = \frac{2(46000)}{2000(5)(0.23)} = 100$$

$t = .025$

Hydraulic Pump

$$\text{Horse Power output required} = \frac{Q \rho H}{K}$$

Q = flow rate
ρ = density of fluid
H = Head
K = constant for units

$$H = \frac{\text{System Pressure}}{\rho}$$

$\rho = 55.45 \frac{lb}{ft^3} \div 12^3 = .032 \frac{lb}{in^3}$

$$H = \frac{2000}{.032} = 62{,}500 \text{ in}$$

$$H = \frac{62500}{12} = 5{,}208.3 \text{ ft}$$

$$HP = \frac{2.5 \frac{in^3}{sec} \times 55.45 \frac{lb}{ft^3} \times 5208.3 \text{ ft}}{940{,}400} = .77 \text{ HP}$$

Cylinder name: Boom Extension

Material: 1050 Cold Drawn Steel

Actual load:	936	(lb)
Extension:	72	(in)
Factor of Safety:	5	
Modulus of Elasticity:	3E+07	(psi)
Yield Strength:	84000	(psi)
Density:	.282	(lb/cu in)

Piston Diameter:	1.13668	(in)
Cylinder Bore Diameter:	1.72609	(in)
Cylinder Wall Thickness:	.125623	(in)
Cylinder End Thickness:	.276309	(in)
Cylinder Outside Diameter:	1.97733	(in)
Cylinder Body Length:	72.8289	(in)
Cylinder Length Extended:	144.829	(in)
Cylinder Length Closed:	72.8289	(in)
Weight Empty:	36.0458	(lb)
Weight Extended with Fluid:	41.454	(lb)
Weight Closed with Fluid:	38.4091	(lb)

Cylinder name: Boom Tilt

Material: 1050 Cold Drawn Steel

Actual load:	5600	(lb)
Extension:	48	(in)
Factor of Safety:	5	
Modulus of Elasticity:	3E+07	(psi)
Yield Strength:	84000	(psi)
Density:	.282	(lb/cu in)

Piston Diameter:	1.45152	(in)
Cylinder Bore Diameter:	4.22201	(in)
Cylinder Wall Thickness:	.307273	(in)
Cylinder End Thickness:	.675852	(in)
Cylinder Outside Diameter:	4.83655	(in)
Cylinder Body Length:	50.0276	(in)
Cylinder Length Extended:	98.0276	(in)
Cylinder Length Closed:	50.0276	(in)
Weight Empty:	90.4194	(lb)
Weight Extended with Fluid:	111.991	(lb)
Weight Closed with Fluid:	93.0408	(lb)

Cylinder name: Outrigger

Material: 1050 Cold Drawn Steel

Actual load:	600	(lb)
Extension:	24	(in)
Factor of Safety:	5	
Modulus of Elasticity:	3E+07	(psi)
Yield Strength:	84000	(psi)
Density:	.282	(lb/cu in)

Piston Diameter:	.587216	(in)
Cylinder Bore Diameter:	1.38198	(in)
Cylinder Wall Thickness:	.100579	(in)
Cylinder End Thickness:	.221224	(in)
Cylinder Outside Diameter:	1.58313	(in)
Cylinder Body Length:	24.6637	(in)
Cylinder Length Extended:	48.6637	(in)
Cylinder Length Closed:	24.6637	(in)
Weight Empty:	5.31338	(lb)
Weight Extended with Fluid:	6.46898	(lb)
Weight Closed with Fluid:	5.52587	(lb)

Cylinder name: Boom Tilt

Material:	C27000 Yellow Brass	
Actual load:	5600	(lb)
Extension:	48	(in)
Factor of Safety:	5	
Modulus of Elasticity:	1.54E+07	(psi)
Yield Strength:	60200	(psi)
Density:	.309	(lb/cu in)

Piston Diameter:	1.71483	(in)
Cylinder Bore Diameter:	4.22201	(in)
Cylinder Wall Thickness:	.471398	(in)
Cylinder End Thickness:	.852532	(in)
Cylinder Outside Diameter:	5.1648	(in)
Cylinder Body Length:	50.5576	(in)
Cylinder Length Extended:	98.5576	(in)
Cylinder Length Closed:	50.5576	(in)
Weight Empty:	150.243	(lb)
Weight Extended with Fluid:	171.814	(lb)
Weight Closed with Fluid:	153.928	(lb)

Cylinder name: Boom Extension

Material: C27000 Yellow Brass

Actual load:	936	(lb)
Extension:	72	(in)
Factor of Safety:	5	
Modulus of Elasticity:	1.54E+07	(psi)
Yield Strength:	60200	(psi)
Density:	.309	(lb/cu in)

Piston Diameter:	1.34289	(in)
Cylinder Bore Diameter:	1.72609	(in)
Cylinder Wall Thickness:	.192722	(in)
Cylinder End Thickness:	.348542	(in)
Cylinder Outside Diameter:	2.11153	(in)
Cylinder Body Length:	73.0456	(in)
Cylinder Length Extended:	145.046	(in)
Cylinder Length Closed:	73.0456	(in)
Weight Empty:	58.2387	(lb)
Weight Extended with Fluid:	63.6469	(lb)
Weight Closed with Fluid:	61.5438	(lb)

Cylinder name: Fork Tilt

Material: C27000 Yellow Brass

Actual load:	5600	(lb)
Extension:	18	(in)
Factor of Safety:	5	
Modulus of Elasticity:	1.54E+07	(psi)
Yield Strength:	60200	(psi)
Density:	.309	(lb/cu in)

Piston Diameter:	1.05012	(in)
Cylinder Bore Diameter:	4.22201	(in)
Cylinder Wall Thickness:	.471398	(in)
Cylinder End Thickness:	.852532	(in)
Cylinder Outside Diameter:	5.1648	(in)
Cylinder Body Length:	20.5576	(in)
Cylinder Length Extended:	38.5576	(in)
Cylinder Length Closed:	20.5576	(in)
Weight Empty:	56.3719	(lb)
Weight Extended with Fluid:	64.4611	(lb)
Weight Closed with Fluid:	56.9198	(lb)

Cylinder name: Outrigger

Material:	C27000 Yellow Brass	
Actual load:	600	(lb)
Extension:	24	(in)
Factor of Safety:	5	
Modulus of Elasticity:	1.54E+07	(psi)
Yield Strength:	60200	(psi)
Density:	.309	(lb/cu in)

Piston Diameter:	.693742	(in)
Cylinder Bore Diameter:	1.38198	(in)
Cylinder Wall Thickness:	.154301	(in)
Cylinder End Thickness:	.279057	(in)
Cylinder Outside Diameter:	1.69058	(in)
Cylinder Body Length:	24.8372	(in)
Cylinder Length Extended:	48.8372	(in)
Cylinder Length Closed:	24.8372	(in)
Weight Empty:	8.77824	(lb)
Weight Extended with Fluid:	9.93384	(lb)
Weight Closed with Fluid:	9.07622	(lb)

Cylinder name: Fork Tilt

Material: 1050 Cold Drawn Steel

Actual load:	5600	(lb)
Extension:	18	(in)
Factor of Safety:	5	
Modulus of Elasticity:	3E+07	(psi)
Yield Strength:	84000	(psi)
Density:	.282	(lb/cu in)

Piston Diameter:	.888869	(in)
Cylinder Bore Diameter:	4.22201	(in)
Cylinder Wall Thickness:	.307273	(in)
Cylinder End Thickness:	.675852	(in)
Cylinder Outside Diameter:	4.83655	(in)
Cylinder Body Length:	20.0276	(in)
Cylinder Length Extended:	38.0276	(in)
Cylinder Length Closed:	20.0276	(in)
Weight Empty:	34.1814	(lb)
Weight Extended with Fluid:	42.2706	(lb)
Weight Closed with Fluid:	34.5668	(lb)

Cylinder name: Boom Tilt

Material: 4032-T6 Wrought Aluminum Alloy

Actual load:	5600	(lb)
Extension:	48	(in)
Factor of Safety:	5	
Modulus of Elasticity:	1.03E+07	(psi)
Yield Strength:	46000	(psi)
Density:	.098	(lb/cu in)

Piston Diameter:	1.89624	(in)
Cylinder Bore Diameter:	4.22201	(in)
Cylinder Wall Thickness:	.69327	(in)
Cylinder End Thickness:	1.05907	(in)
Cylinder Outside Diameter:	5.60855	(in)
Cylinder Body Length:	51.1772	(in)
Cylinder Length Extended:	99.1772	(in)
Cylinder Length Closed:	51.1772	(in)
Weight Empty:	69.1127	(lb)
Weight Extended with Fluid:	90.6839	(lb)
Weight Closed with Fluid:	73.656	(lb)

Cylinder name: Boom Extension

Material: 4032-T6 Wrought Aluminum Alloy

Actual load:	936	(lb)
Extension:	72	(in)
Factor of Safety:	5	
Modulus of Elasticity:	1.03E+07	(psi)
Yield Strength:	46000	(psi)
Density:	.098	(lb/cu in)

Piston Diameter:	1.48495	(in)
Cylinder Bore Diameter:	1.72609	(in)
Cylinder Wall Thickness:	.28343	(in)
Cylinder End Thickness:	.432983	(in)
Cylinder Outside Diameter:	2.29295	(in)
Cylinder Body Length:	73.299	(in)
Cylinder Length Extended:	145.299	(in)
Cylinder Length Closed:	73.299	(in)
Weight Empty:	25.2192	(lb)
Weight Extended with Fluid:	30.6274	(lb)
Weight Closed with Fluid:	29.27	(lb)

Cylinder name: Fork Tilt

Material:	4032-T6 Wrought Aluminum Alloy	
Actual load:	5600	(lb)
Extension:	18	(in)
Factor of Safety:	5	
Modulus of Elasticity:	1.03E+07	(psi)
Yield Strength:	46000	(psi)
Density:	.098	(lb/cu in)

Piston Diameter:	1.1612	(in)
Cylinder Bore Diameter:	4.22201	(in)
Cylinder Wall Thickness:	.69327	(in)
Cylinder End Thickness:	1.05907	(in)
Cylinder Outside Diameter:	5.60855	(in)
Cylinder Body Length:	21.1772	(in)
Cylinder Length Extended:	39.1772	(in)
Cylinder Length Closed:	21.1772	(in)
Weight Empty:	26.2226	(lb)
Weight Extended with Fluid:	34.3118	(lb)
Weight Closed with Fluid:	26.9065	(lb)

Cylinder name: Outrigger

Material: 4032-T6 Wrought Aluminum Alloy

Actual load:	600	(lb)
Extension:	24	(in)
Factor of Safety:	5	
Modulus of Elasticity:	1.03E+07	(psi)
Yield Strength:	46000	(psi)
Density:	.098	(lb/cu in)

Piston Diameter:	.76713	(in)
Cylinder Bore Diameter:	1.38198	(in)
Cylinder Wall Thickness:	.226926	(in)
Cylinder End Thickness:	.346664	(in)
Cylinder Outside Diameter:	1.83583	(in)
Cylinder Body Length:	25.04	(in)
Cylinder Length Extended:	49.04	(in)
Cylinder Length Closed:	25.04	(in)
Weight Empty:	3.97668	(lb)
Weight Extended with Fluid:	5.13228	(lb)
Weight Closed with Fluid:	4.34304	(lb)

Cooling System

Hole diameter in block = .43in = .036 ft

Length of block = 3 ft

Width of block = 1.09 ft

Thickness of block = .305 ft

Total volume of block = (3)(1.09)(.305) = .996 ft^3

Volume drilled out of block = (5)(π)(.036 ft)^2(3ft)
= .061 ft^3

Metallic volume = .996 − .061 = .935 ft^3

Density of block = 168.7 lb/ft^3

Mass of block = (.935 ft^3)(168.7 lb/ft^3) = 157.7 lbs = m

Surface area in contact with the fluid = π(.019)(3)(5)
= .90 ft^2 = A_s

Cross-sectional area of hydraulic line = (.019 ft)^{2}π = .0012 ft^2 = A

Inside diameter of hydraulic line = .23 in = .019ft = D

Mass flow rate = $\dot{m}$ = $150 \frac{in^3}{min} \cdot 55.45 \frac{lb}{ft^3} \cdot \frac{1 ft^3}{1728 in^3} \cdot \frac{60 min}{1 hr}$

$\dot{m}$ = 288.8 lb/hr

Velocity of the fluid = $V_m = \frac{\dot{m}}{\rho_f A} = \frac{288.8 \text{ lb/hr}}{(55.45 \text{ lb/ft}^3)(.0012 \text{ ft}^2)}$

V_m = 4340.2 ft/hr

Reynold's number = $Re_D = \frac{\rho_f V_m D}{\mu_b} = \frac{(55.45 \text{ lb/ft}^3)(4340.2 \text{ ft/hr})(.019 \text{ ft})}{25 \text{ lb/(ft·hr)}}$

Re_D = 182.9 < 2300 => laminar flow

Prantl number = $Pr = \frac{\mu_b C_p}{K} = \frac{(25 \text{ lb/(ft·hr)})(.45 \frac{Btu}{lb \cdot °R})}{.0838 \frac{Btu}{hr \cdot ft \cdot °R}}$

Pr = 134.25

If $\frac{Re_D Pr D}{L} > 10$,

then the following correlation may be used for laminar flow in a tube,

$$\bar{N}_{u_D} = 1.86 (Re_D Pr)^{.33} \left(\frac{D}{L}\right)^{.33} \left(\frac{\mu_b}{\mu_s}\right)^{.14}$$

where L is the length of the tube and μ_b is the viscosity at the bulk temperature and μ_s is the viscosity at the wall temperature.

$$\frac{(182.9)(134.25)(.019\ ft)}{10\ ft} = 46.65 > 10$$

$$\bar{N}_{u_D} = 1.86\left[(182.9)(134.25)\right]^{.33}\left[\frac{.019\ ft}{10\ ft}\right]^{.33}\left[\frac{25\ lb/(ft\cdot hr)}{77.41\ lb/(ft\cdot hr)}\right]^{.14}$$

$$\bar{N}_{u_D} = 5.64$$

$$\bar{h}_c = \frac{K \bar{N}_{u_D}}{D} = \frac{\left(.0838 \frac{Btu}{hr\cdot ft\cdot {}^\circ R}\right)(5.64)}{.019\ ft} = 24.87 \frac{Btu}{hr\cdot ft^2\cdot {}^\circ R}$$

(assuming all the pump work is converted into heat)

1 hp. pump

$$1\ hp \cdot \frac{745.7\ W}{1\ hp} \cdot \frac{1\ Btu/hr}{.293\ W} = 2545.05 \frac{Btu}{hr}$$

q_{GF} = heat gained by fluid per unit time

$= \dot{m} c_p \Delta T$

$$2545.05 \frac{Btu}{hr} = \left(288.8 \frac{lb}{hr}\right)\left(.45 \frac{Btu}{lb\cdot {}^\circ R}\right)\Delta T$$

$\Delta T = 19.6^\circ F$ = temperature rise of fluid due to pump

Newtonian Heating

rate of heat transfer by convection to the surface of the block	=	rate of change of internal energy of the block

$$hA_s(T_f - T) = \rho c V \frac{dT}{dt}$$

let $\theta = T_f - T$

$$d\theta = -dT$$

$$hA_s\theta = -\rho c V \frac{d\theta}{dt}$$

$$\frac{d\theta}{\theta} = -\frac{hA_s}{mc}\,dt$$

$$\ln\theta = -\frac{hA_s}{mc}t + c$$

$$\theta = e^{-\frac{hA_s}{mc}t + c} = Me^{-\frac{hA_s}{mc}t}$$

$$\theta = \theta_i = (T_f - T_i) \quad \text{at} \quad t = 0$$

$$\theta_i = M$$

$$\theta = \theta_i e^{-\frac{hA_s}{mc}t}$$

$$\frac{\theta}{\theta_i} = \frac{T_f - T}{T_f - T_i} = e^{-\frac{hA_s}{mc}t}$$

$$T(t) = T_f - (T_f - T_i)e^{-\frac{hA_s}{mc}t}$$

assuming $T_f \cong (.85)(T_{max.}) = (.85)(250°F) = 215°F$
$_{moon}$

adding in the temperature rise from the pump $\cong 20°F$

$T_f = 235°F$

$T_i = -50°F$

$$T(t) = 235 - 285\, e^{-.57t}$$

t (hrs)	T (°F)	
0	-50	123.8°F
1	73.8	

heat gained by the block = $q_{GB} = (157.73\,lb)\left(.248 \frac{Btu}{lb \cdot °R}\right)(123.8°F)$

$= 4842.7 \frac{Btu}{1^{st}\ hr}$

heat lost by the fluid = $q_{LF} = q_{GB} = \dot{m} c_p \Delta T$

$$4842.7 \frac{Btu}{hr} = \left(288.8 \frac{lb}{hr}\right)\left(.45 \frac{Btu}{lb \cdot °R}\right)\Delta T$$

$\Delta T = 37.2°F$ drop in fluid temperature during 1st hr.

now $T(t) = 197.8 - 247.8\, e^{-.57t}$ after 1st hr.

t (hrs)	T (°F)	
0	-50	
1	73.8	44.7°F
2	118.5	

$q_{GB} = (157.73)(.248)(44.7) = 1748.5 \frac{Btu}{2^{nd}\ hr}$

$1748.5 = (288.8)(.45)\Delta T$

$\Delta T = 13.4°F$ temperature drop in the fluid during 2nd hr

To be on the safe side, the block should be changed after two hours of continuous operation or when it's temperature reaches about 120°F because for higher block temperatures than 120°F, the drop in the fluid temperature becomes small.

Aluminum

$C_p = .248 \frac{Btu}{lb \cdot °R}$

$K = 138.7 \frac{Btu}{hr \cdot ft \cdot °R}$

$\rho = 168.7 \frac{lb}{ft^3}$

Fluid

$\mu_s = 77.41 \frac{lb}{ft \cdot hr}$ $C_p = .45 \frac{Btu}{lb \cdot °R}$

$\mu_b = 25 \frac{lb}{ft \cdot hr}$

$\rho = 55.45 \frac{lb}{ft^3}$

$K = .0838 \frac{Btu}{hr \cdot ft \cdot °R}$

$\bar{N}_{u_D}$ = average Nusselt number in a tube

$\bar{h}_c$ = average convective heat transfer coefficient

T_f = hydraulic fluid temperature

T_i = initial temperature of the block

Battery Requirement (Weight)

Given: 1 pump at 1 hp = 750 Watts
4 wheel motors at 3/4 hp = 2250 Watts
Electronics at 150 Watts

So the total power needed is:

$$750\ W + 2250\ W + 150\ W = 3150\ W$$

the forklift will operate for 8 hours

therefore, the power which must be supplied by the batteries is

$$3150\ W\ (8\ hrs) = 25{,}200\ W \cdot hrs$$

The predicted value for the high-energy alkali metal rechargable batteries is 90 W·hr/kg

The mass of batteries required is

$$\frac{25{,}200\ W \cdot hrs}{90\ \frac{W \cdot hrs}{kg}} = 280\ kg$$

So the batteries weight is

$$280\ kg\ (9.8\ \tfrac{m}{s^2}) \cong 2750\ N \cong 620\ lbs$$

Drive Gearing Analysis

Given $P = 16$ teeth/in

$d_G = 24$ in

$N = dP = 24 \text{ in} \left(16 \frac{\text{teeth}}{\text{in}}\right)$

$N_G = 384$ teeth

If $\frac{N_G}{N_P} = 24:1$

then $d_P = \frac{24}{16} = 1.5$ in

Determine the speed n_G

Given 10 mph top speed

45 in wheel dia.

$$n_G = 633600 \frac{\text{in}}{\text{hour}} \times \frac{1 \text{ rev}}{150.8 \text{ in}} \times \frac{1 \text{ hr}}{60 \text{ min}}$$

$n_G = 70$ rpm

pitch-line velocity V

$$V = \frac{\pi d_G n_G}{12} = 439.82 \text{ fpm}$$

transmitted load W_t

$$W_t = \frac{33000(3/4)}{439.82} = 56.273 \text{ lbs}$$

Velocity factor

$$K_v = \frac{1200}{1639.82} = 0.73179$$

Lewis form factor is 0.600 max

S_y for Al 2219-T42 is 27000 psi

Face width F

$$F = \frac{W_t P}{K_v Y S_y} = \frac{56.273(16)}{(0.73179)(0.6)(27000)}$$

$$= 0.0759$$

Let $F = 0.375$ (3/8")

$$\sigma = \frac{W_t P}{K_v Y F} = \frac{56.273(16)}{(0.73179)(0.6)(0.375)}$$

$$\sigma = 5468 \text{ psi}$$

$$n_{safety} = 4.93$$

APPENDIX B
Design Drawings

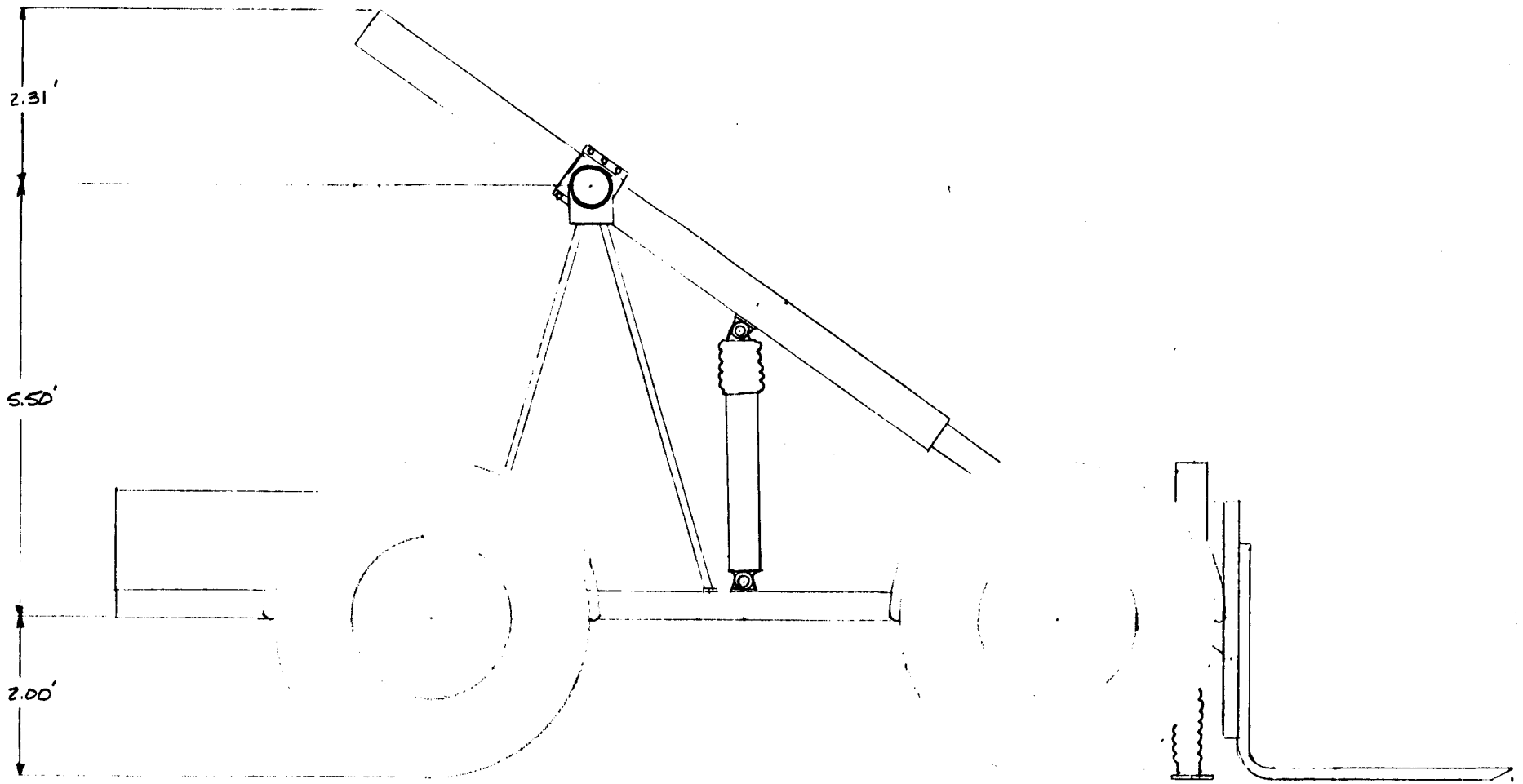

LUNAR FORKLIFT SIDE VIEW

SCALE: 1/2" = 1'

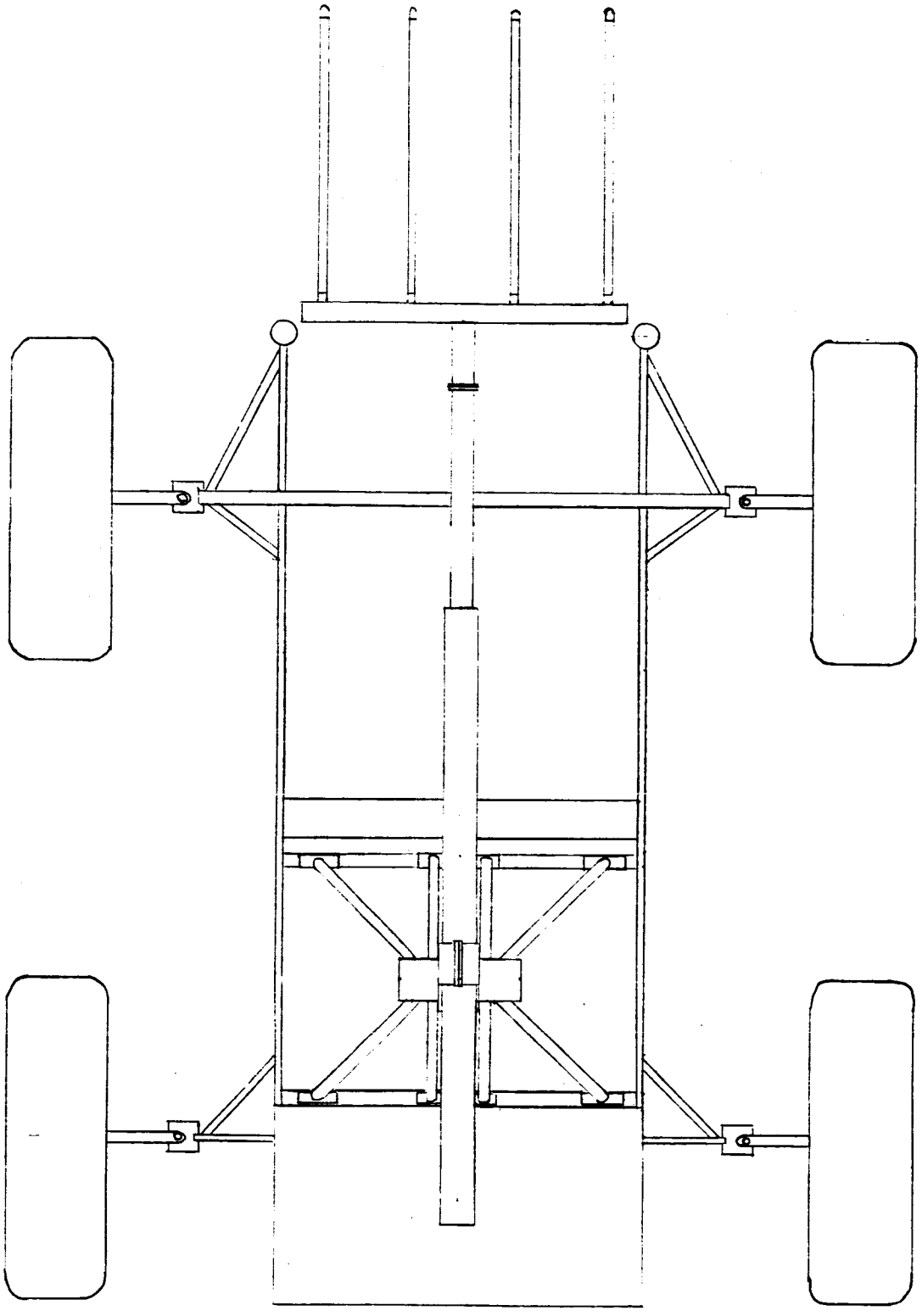

LUNAR FORKLIFT TOP VIEW

SCALE: 1/2" = 1'

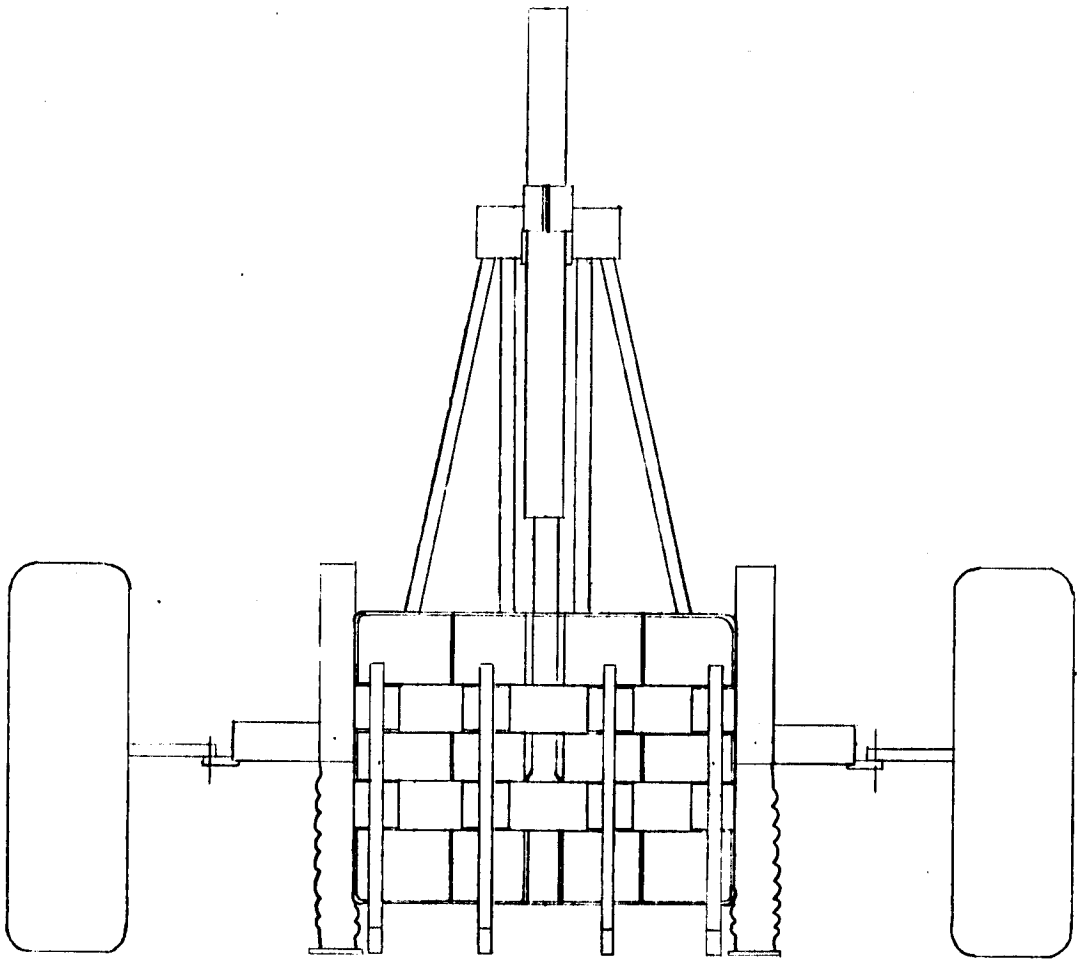

LUNAR FORKLIFT FRONT VIEW

SCALE: 1/2" = 1'

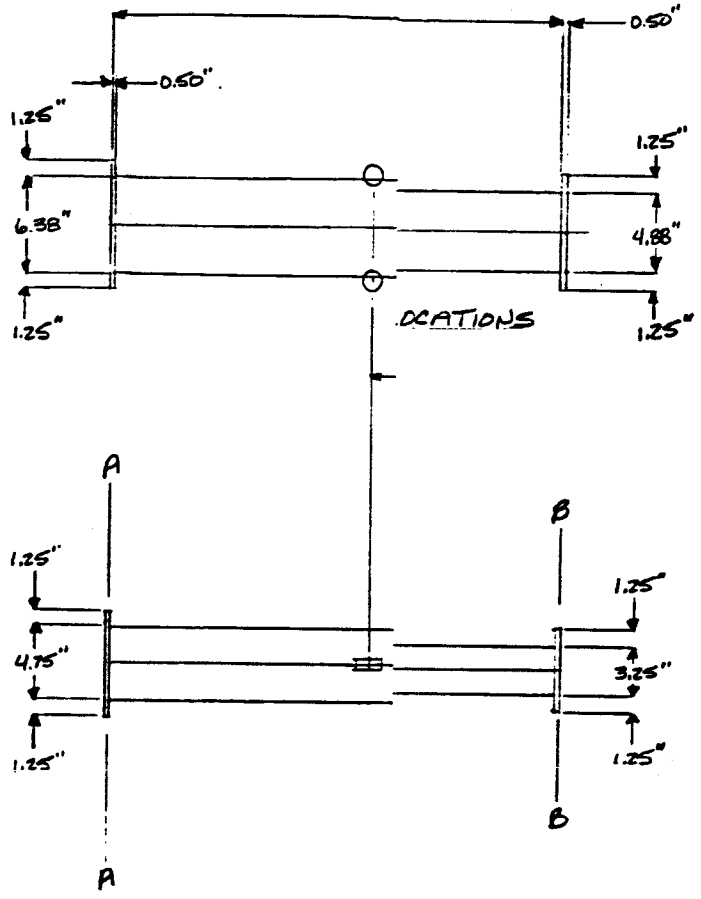

BOOM MATERIAL: 4032-T6

CIRCULAR TUBES

2.0" O.D.

1/8" WALL THICKNESS

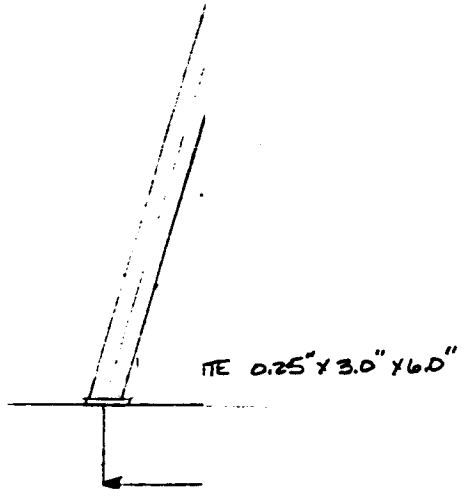

ALL MATERIAL: 4032-T6

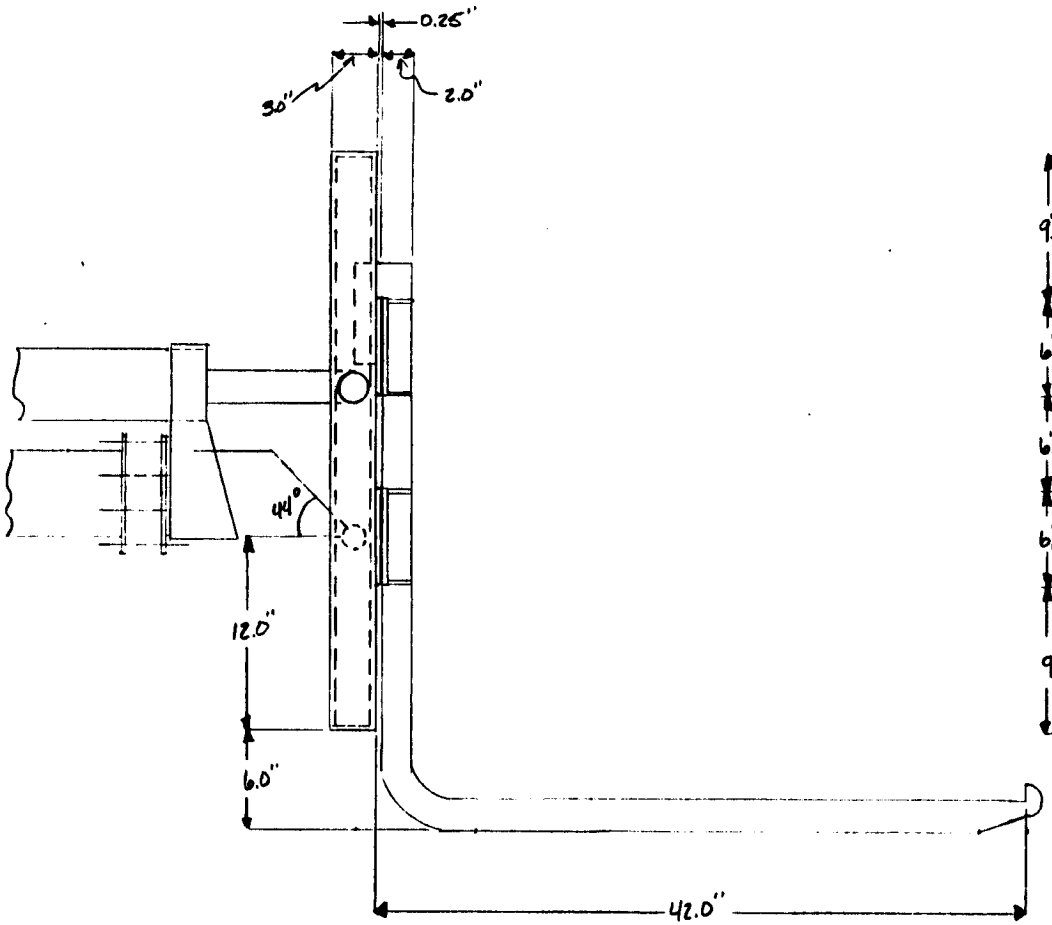

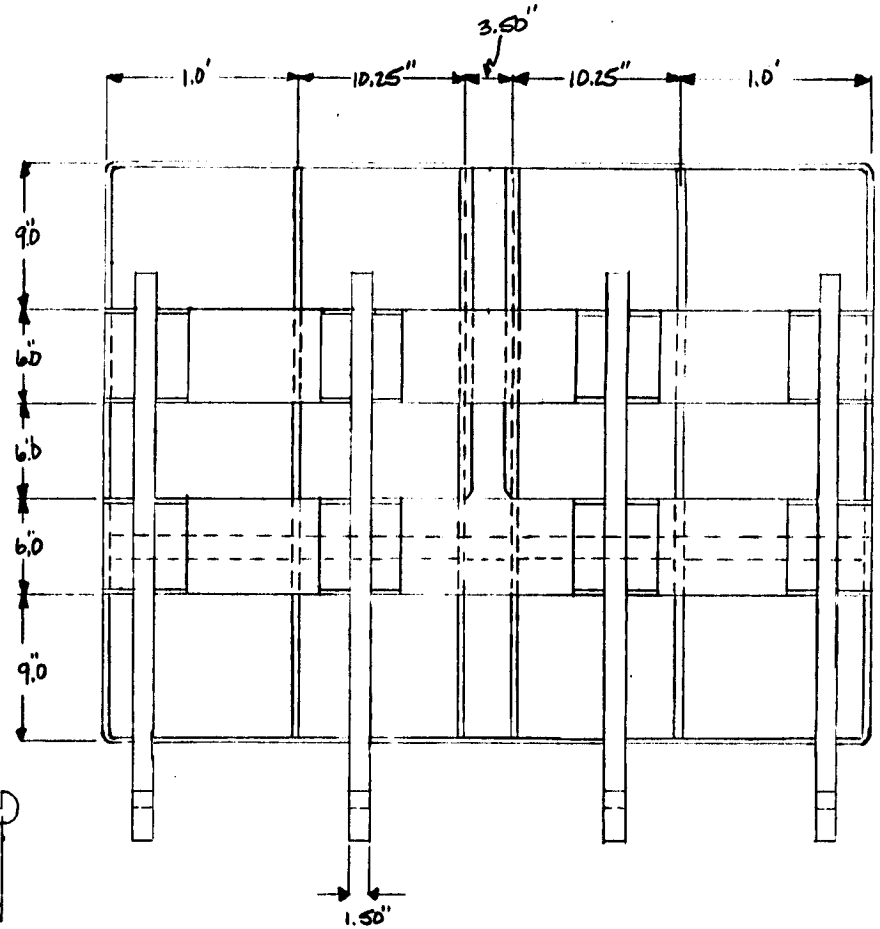

CARRAIGE AND FORK ASSEMBLY

SCALE: 1" = 1'

CHASSIS

SCALE: 1" = 24"

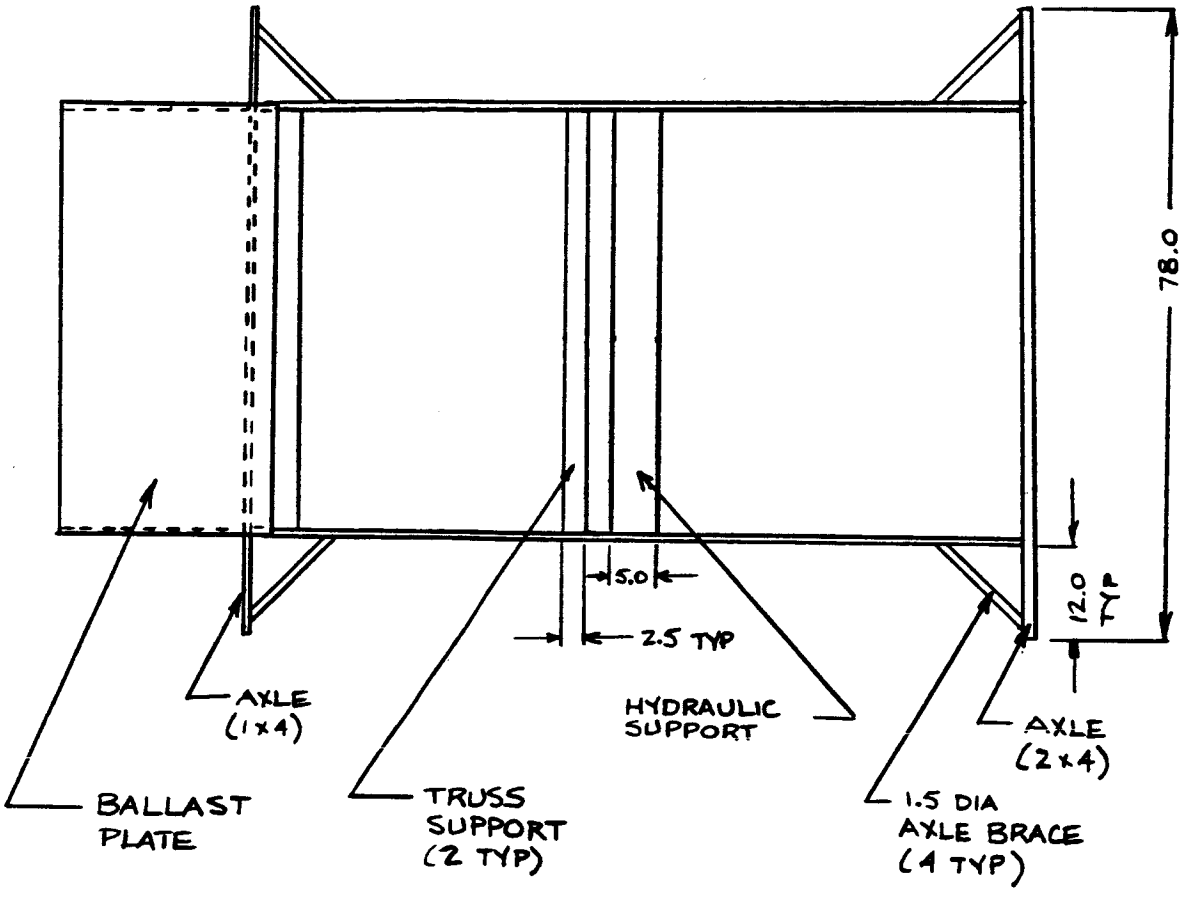

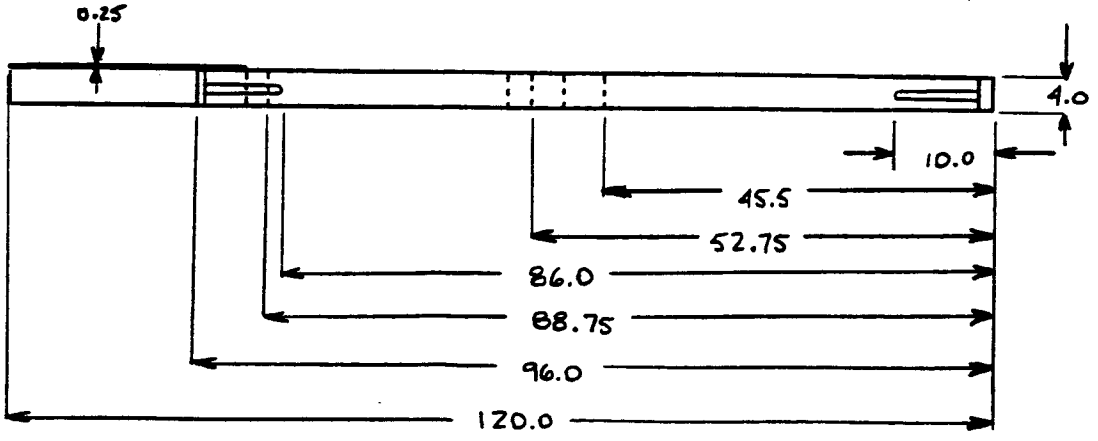

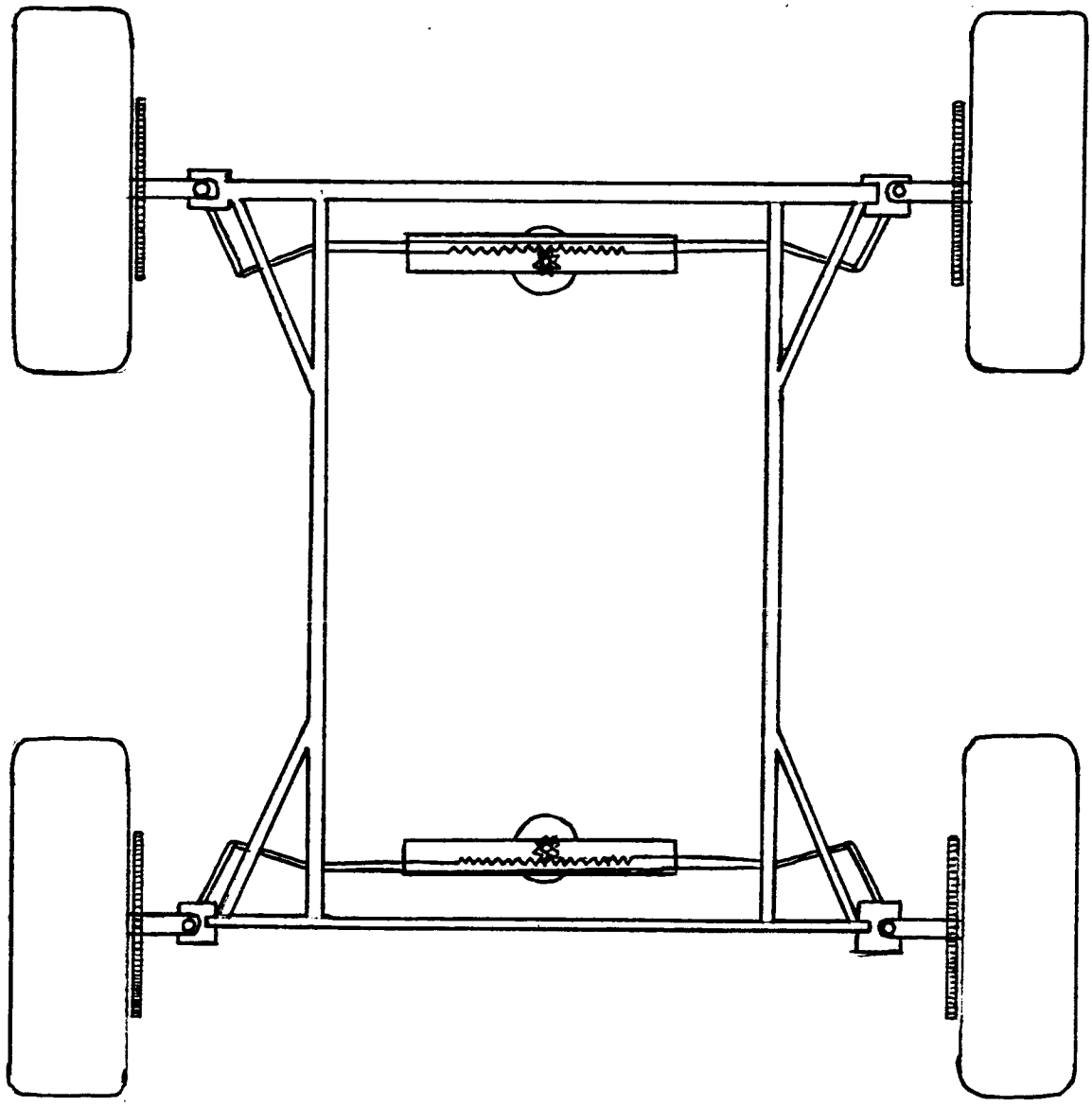

	STEERING COMPONENTS	SCALE: $\frac{1}{2}" = 1'$

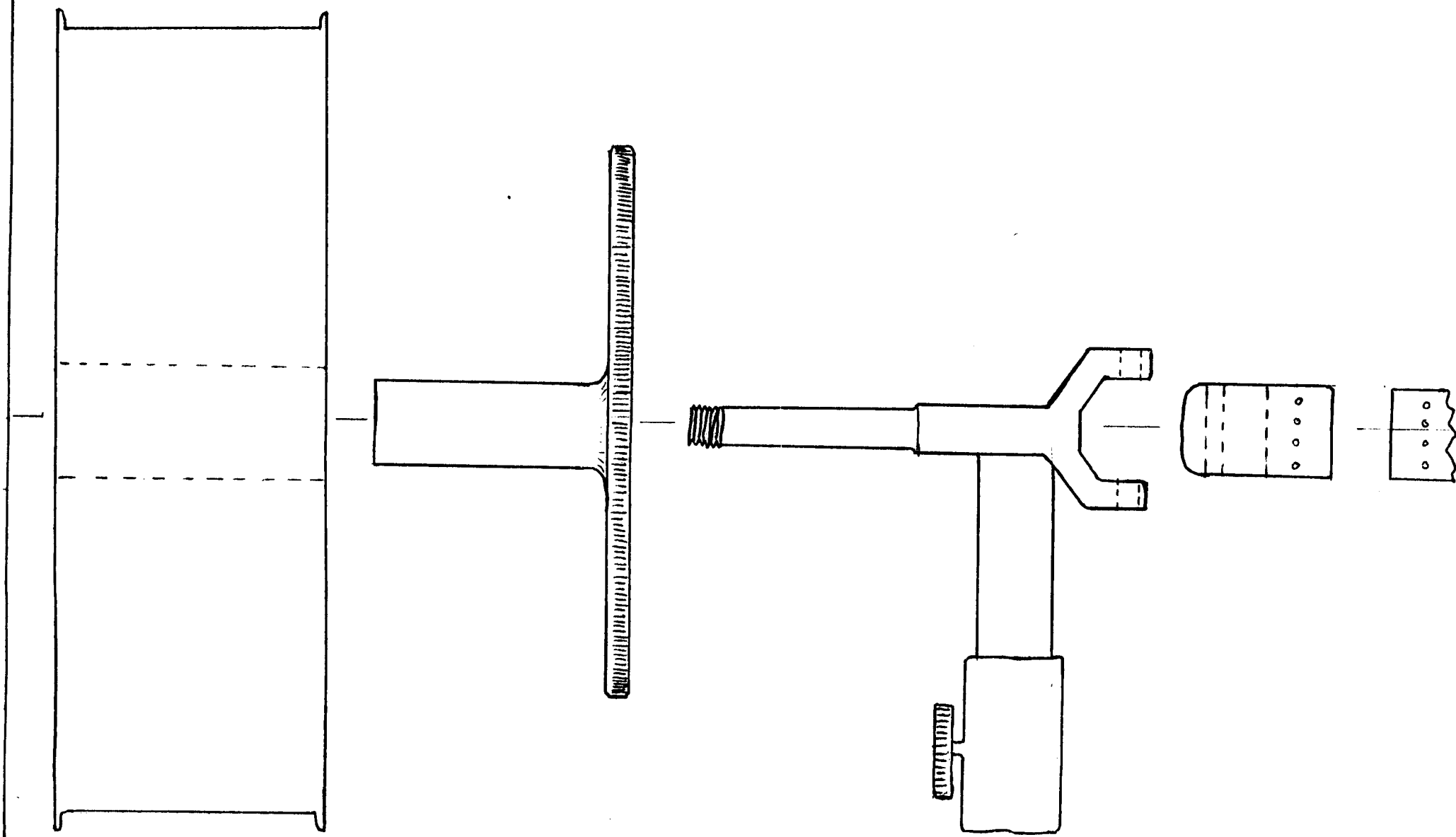

DRIVE COMPONENTS

SCALE: 1" = 6"

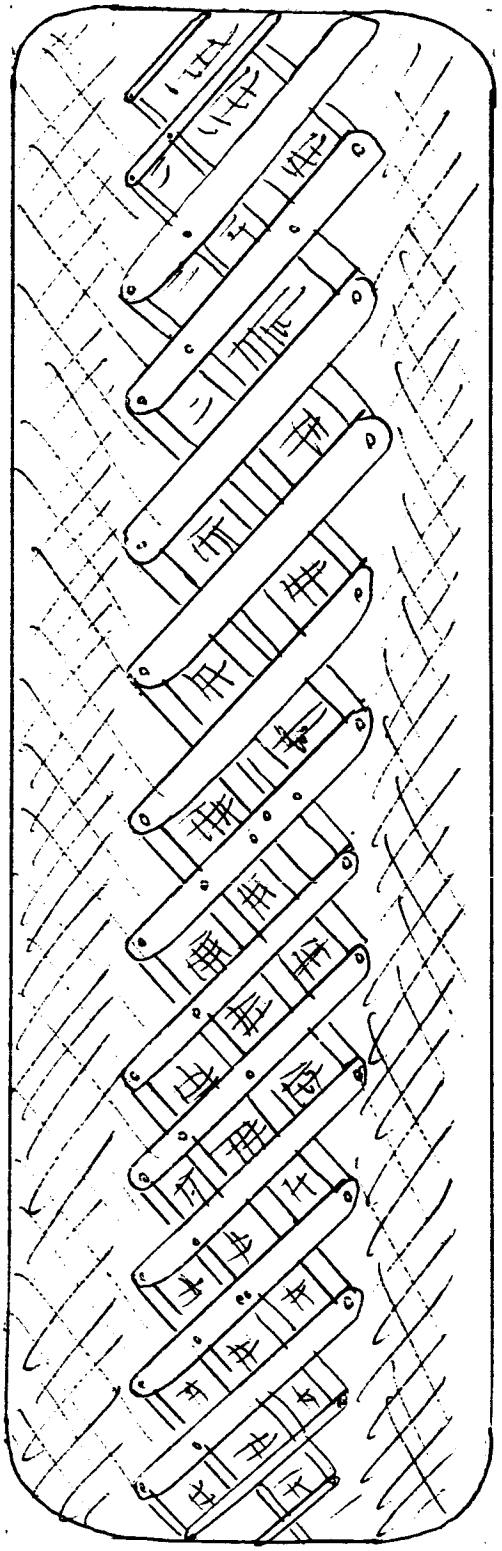

	WHEEL DESIGN	SCALE: 1" = 6"

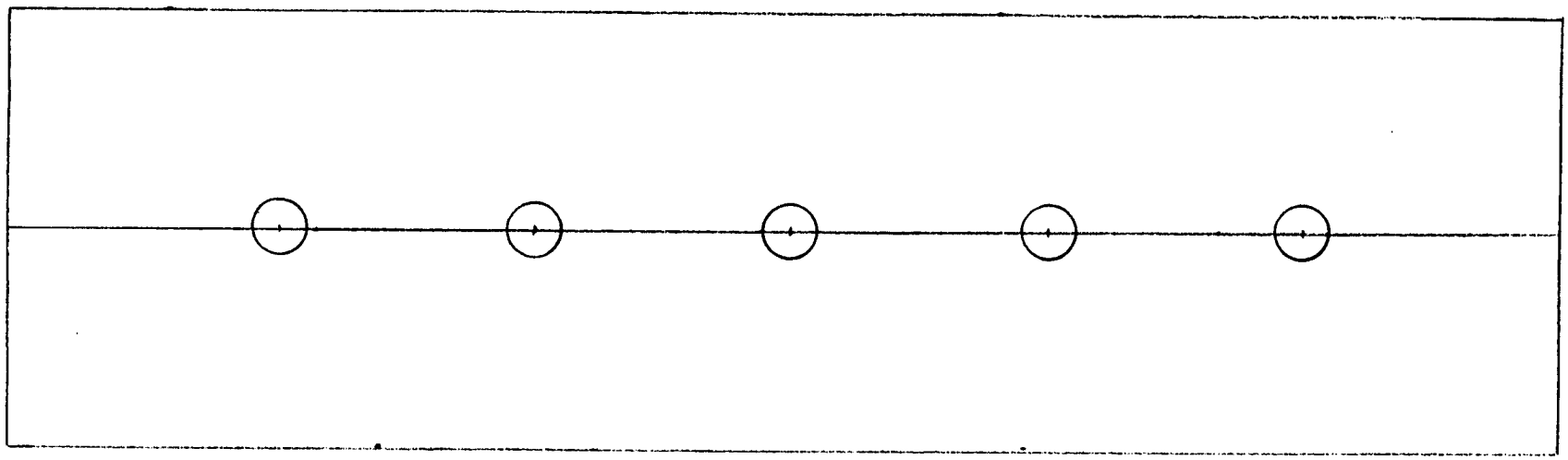

	Front View of Cooling Block	Scale 8" = 1'

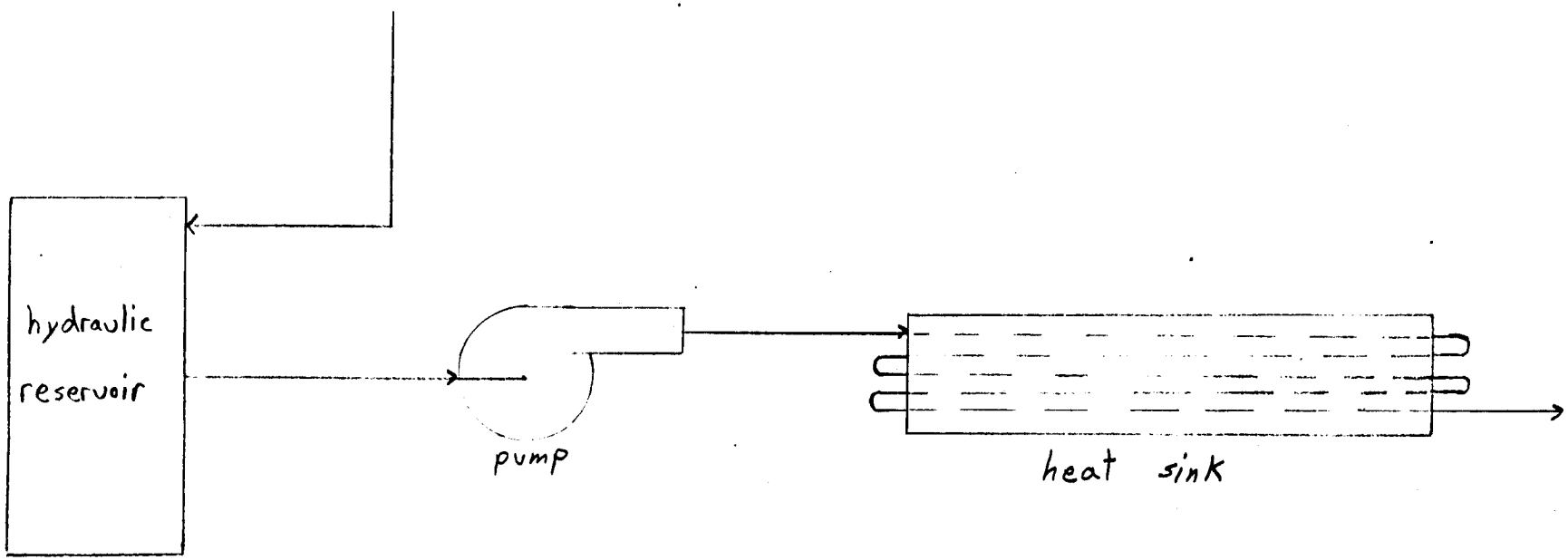

Schematic of Cooling System

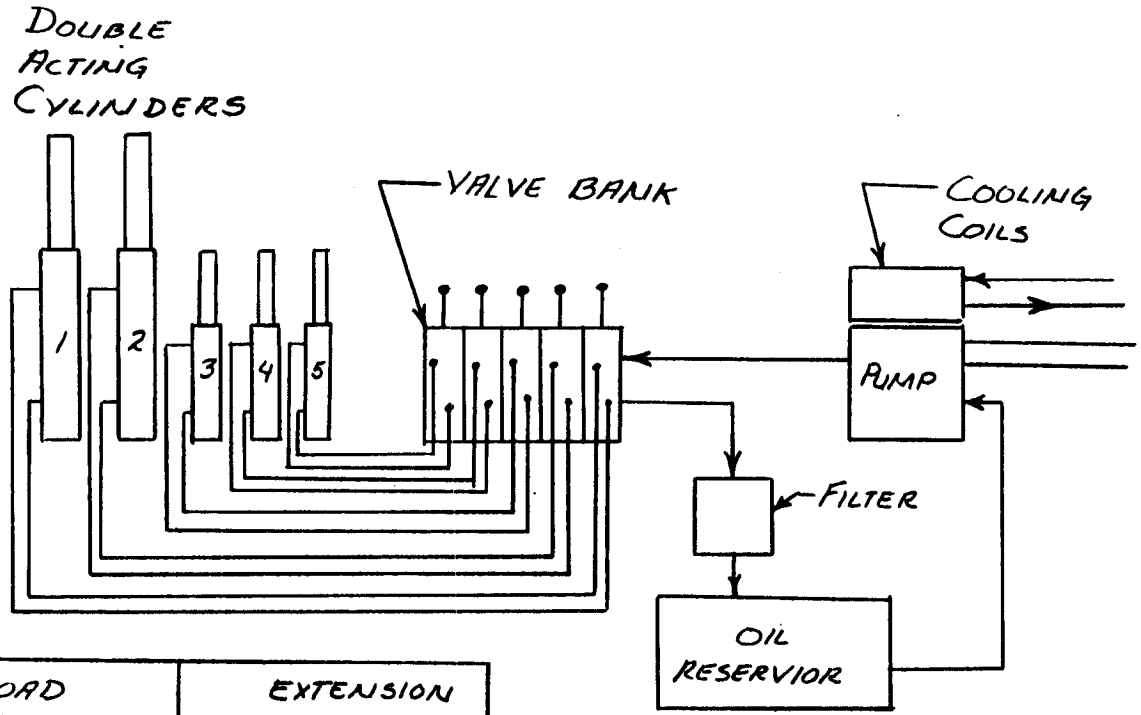

CYLINDERS

	NAME	MAX. LOAD	EXTENSION
1	BOOM TILT	5600 lb	48"
2	BOOM EXTENSION	936 lb	72"
3	OUTRIGGER	600 lb	24"
4	OUTRIGGER	600 lb	24"
5	FORK TILT	5600 lb	18"

HYDRALIC SYSTEM SCHEMATIC

NO SCALE

WIRING DIAGRAM KEY

1. BRAKE LIGHTS

2. BATTERY

   A. BATTERY TEMPERATURE SENDER

3. REVERSE WARNING LIGHT

4. LOW POWER REVERSE WARNING AUDIO TRANSMITTER

5. CIRCUIT BREAKERS

   A. FOUR WHEEL MOTORS
   B. HYDRAULIC PUMP
   C. STEERING MOTORS
   D. ADDITIONAL EQUIPMENT

6. WHEEL DRIVE MOTORS

   A. WHEEL TEMPERATURE SENDER
   B. SPEED SENSOR

7. RECEIVER - MICROCOMPUTER

8. HYDRAULIC CYLINDER CONTROL UNIT

9. STEERING MOTOR (REAR)

10. HYDRAULIC PUMP

    A. HYDRAULIC PUMP TEMPERATURE SENDER

11. TEMPERATURE RELAY - SWITCHES ON HEATERS FOR SEALS ON HYDRAULIC CYLINDERS.

12. HEATERS FOR HYDRAULIC CYLINDER SEALS

13. STEERING MOTOR (FRONT)

    A. FRONT STEERING MOTOR TEMPERATURE SENDER

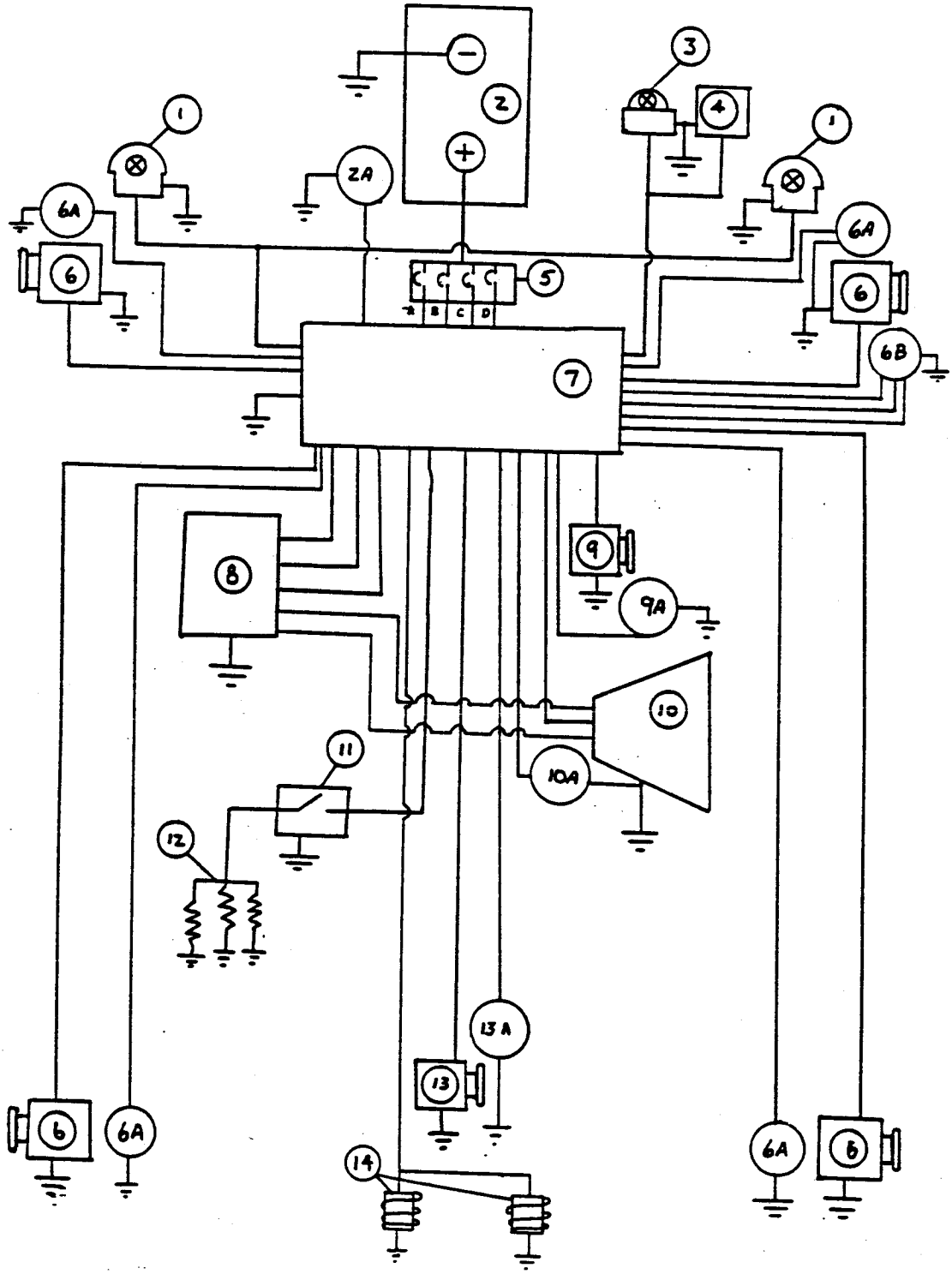

WIRING DIAGRAM

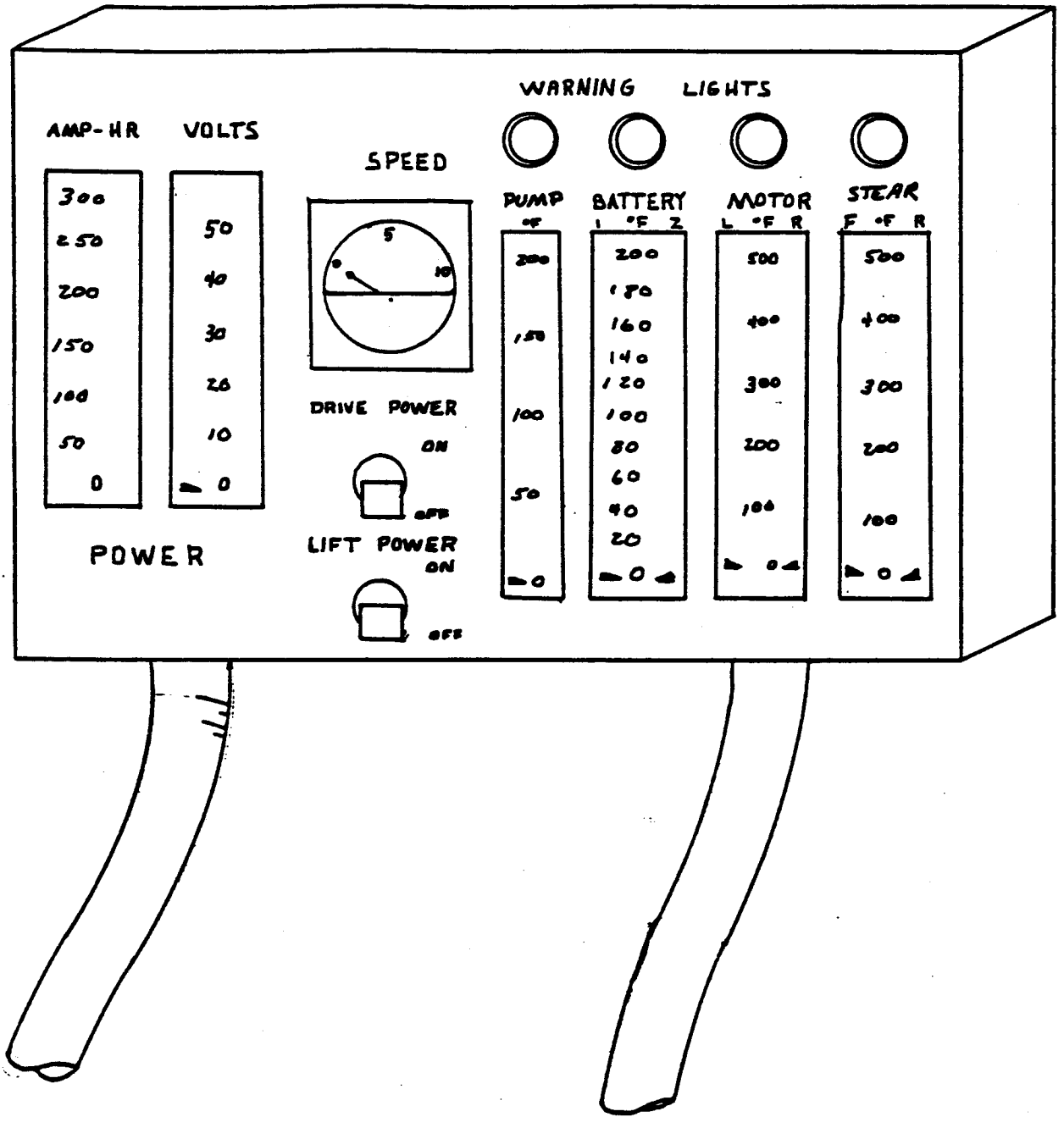

INSTRUMENT PANEL

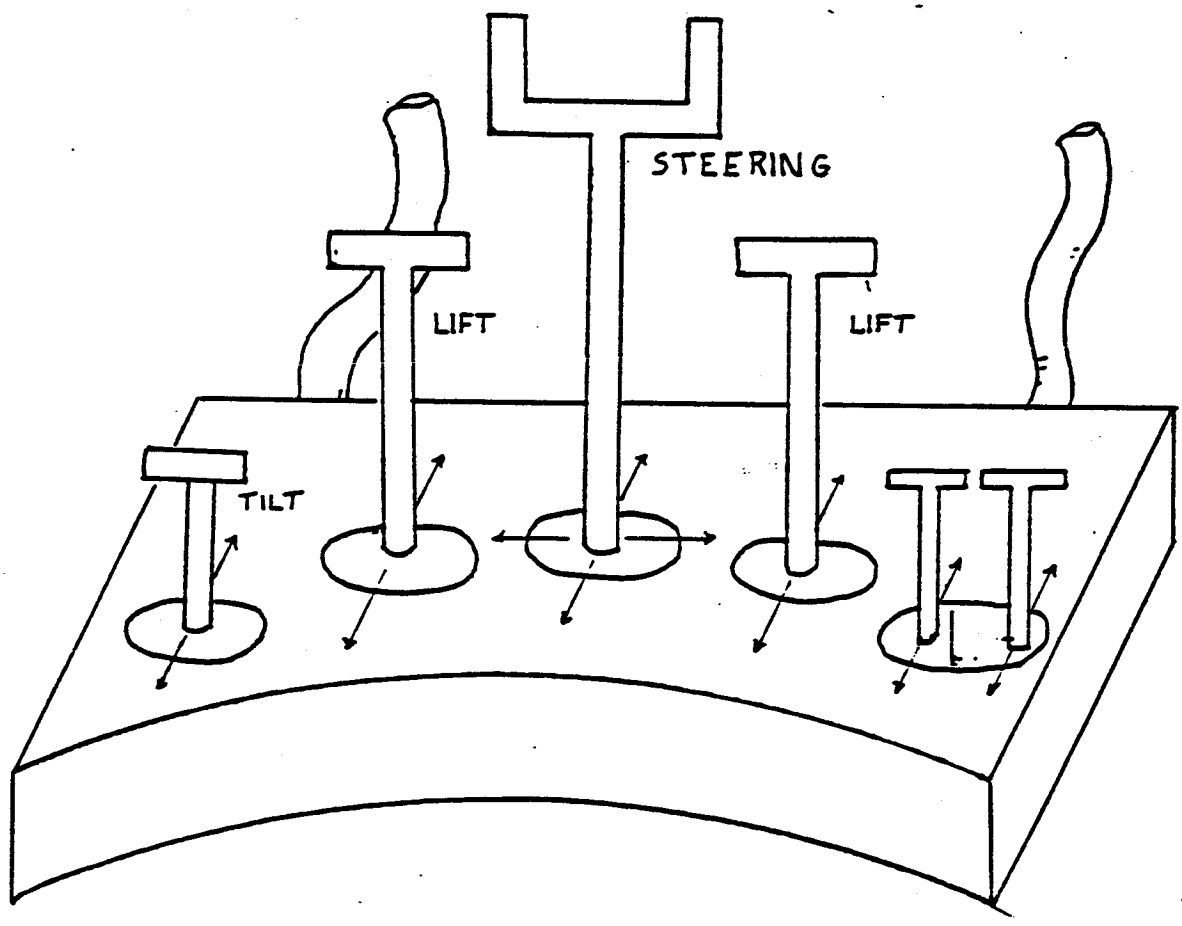

CONTROL PANEL

APPENDIX C
Computer Programs

COMPOSITE LAMINATE SIZING PROGRAM

This program is an interactive optimization program designed to run on an IBM PC using BASIC. It will find a minimum thickness laminate which will not fail under any of the load condition entered. As the program is currently dimensioned, four independent load combinations and 6-ply orientations can be entered. Only point stresses are considered, thus the program optimizes the laminate only at one point in the structure. Also, the program assumes in-plane loads only and no out-of-plane deflections. This implies a symmetric laminate, but stacking sequence is not a factor in the program. The layer thickness generated by the program is the total and must be divided by 2 to get the halves of a symmetric laminate.

```
10 DEFINT I-P:DEFDBL F
20 DIM A(3,3),B(6,9),C(6,6),D(3,3),G(3,3),XN(4,3),AI(3,3),Q(3,3),H(6),R(3),
   S(3),T(6),U(5),V(7),X(6),Y(3),Z(6),E(4,3)
30 DIM C%(10,2)
40 DEF FNRAD(X)=X/57.29578
50 DEF FNRAD(X)=X/57.29578
60 RESTORE
70 READ IMAX,E2,E5,E6
80 ITER = 1
90 GOSUB 2530
100 PRINT "CORRECTIONS":INPUT "(Y/N)";A$
110 IF A$="Y" THEN 90
120 CLS: PRINT"WORKING":PRINT "ITERATION";ITER
130 GOSUB 2900
140 GOSUB 2320
150 GOSUB 2180
160 GOSUB 1660
170 CLS:PRINT "WORKING": PRINT "ITERATION";ITER
180 IF F$="FAIL" THEN 3160
190 GOSUB 1340
200 ITER=ITER+1
210 IF F$="FAIL" OR ITER > IMAX THEN 3160
220 GOTO 160
230 REM ** CONSTRAINT TEST**
240 G$="PASS":NC=0
250 FOR P = 1 TO NPLY
260 IF H(P) = 0 THEN 430
270 II=P: GOSUB 1200
280 FOR N=1 TO NL
290 FCON =-1
300 FOR K=1 TO 3
310 FOR J=1 TO 3
320 FCON = FCON + G(K,J)*E(N,J)*E(N,K)
330 NEXT J
340 FCON =FCON+S(K)*E(N,K)
350 NEXT K
360 IF FCON>0 THEN G$="FAIL":RETURN
370 IF FCON<-ES THEN 410
```

```
380 NC=NC+1
390 C%(NC,1)=P
400 C%(NC,2)=N
410 NEXT N
420 NEXT P
430 RETURN
440 REM ** GRADIENT **
450 UNORM=0
460 II=P:GOSUB 1200
470 FOR L=1 TO NPLY
480 IF H(L) = 0 THEN 680
490 II=L:GOSUB 1090
500 FOR J=1 TO 3
510 R(J)=0
520 FOR K = 1 TO 3
530 R(J) = R(J)-Q(J,K)*E(N,K)
540 NEXT K,J
550 FOR J=1 TO 3
560 Y(J) = 0
570 FOR K = 1 TO 3
580 Y(J)=Y(J)+AI(J,K)*R(K)
590 NEXT K,J
600 Z(L)=0
610 FOR J=1 TO 3
620 FOR K=1 TO 3
630 Z(L)=Z(L)+G(J,K)*(Y(J)*E(N,K)+E(N,J)*Y(K))
640 NEXT K
650 Z(L)=Z(L)+S(J)*Y(J)
660 NEXT J
670 UNORM=UNORM+Z(L)*Z(L)
680 NEXT L
690 UNORM=SQR(UNORM)
700 FOR L=1 TO NPLY
710 Z(L)=Z(L)/UNORM
720 NEXT L
730 RETURN
740 REM ** STRAINS **
750 DIM F(3,3)
760 FOR I=1 TO 3
770 FOR J=1 TO 3
780 F(I,J)=A(I,J)+D(I,J)*S
790 NEXT J,I
800 DET#=F(1,1)*F(2,2)*F(3,3)+2*F(1,2)*F(2,3)*F(1,3)-F(2,2)*F(1,3)*F(1,3)-
    F(1,1)*F(2,3)*F(2,3)-F(3,3)*F(1,2)*F(1,2)
810 AI(1,1)=(F(2,2)*F(3,3)-F(2,3)*F(2,3))/DET#
820 AI(2,2)=(F(1,1)*F(3,3)-F(1,3)*F(1,3))/DET#
830 AI(1,2)=(F(1,3)*F(2,3)-F(1,2)*F(3,3))/DET#
840 AI(3,3)=(F(1,1)*F(2,2)-F(1,2)*F(1,2))/DET#
850 AI(1,3)=(F(1,2)*F(2,3)-F(2,2)*F(1,3))/DET#
860 AI(2,3)=(F(1,2)*F(1,3)-F(1,1)*F(2,3))/DET#
870 AI(2,1)=AI(1,2):AI(3,2)=AI(2,3):AI(3,1)=AI(1,3)
880 ERASE F
890 FOR I = 1 TO NL
900 FOR J =1 TO 3
910 E(I,J)=0
920 FOR K = 1 TO 3
930 E(I,J)=E(I,J)+AI(J,K)*XN(I,K)
940 NEXT K,J,I
950 RETURN
960 REM ** A MATRIX **
```

```
970 FOR I = 1 TO 3
980 FOR J =1 TO 3
990 A(I,J)=0:D(I,J)=0
1000 NEXT J,I
1010 FOR I =1 TO NPLY
1020 II=I:GOSUB 1090
1030 FOR J=1 TO 3
1040 FOR K=1 TO 3
1050 A(J,K)=A(J,K)+Q(J,K)*H(I)
1060 D(J,K)=D(J,K)+Q(J,K)*Z(I)
1070 NEXT K,J,I
1080 RETURN
1090 REM ** FORM Q **
1100 Q(1,1)=C(II,1)
1110 Q(1,2)=C(II,3)
1120 Q(1,3)=C(II,5)
1130 Q(3,1)=C(II,5)
1140 Q(3,2)=C(II,6)
1150 Q(3,3)=C(II,4)
1160 Q(2,3)=C(II,6)
1170 Q(2,2)=C(II,2)
1180 Q(2,1)=C(II,3)
1190 RETURN
1200 REM ** FORM G **
1210 G(1,1)=B(II,1)
1220 G(1,2)=B(II,3)
1230 G(1,3)=B(II,5)
1240 G(2,1)=B(II,3)
1250 G(2,2)=B(II,2)
1260 G(2,3)=B(II,6)
1270 G(3,1)=B(II,5)
1280 G(3,2)=B(II,6)
1290 G(3,3)=B(II,4)
1300 S(1)=B(II,7)
1310 S(2)=B(II,8)
1320 S(3)=B(II,9)
1330 RETURN
1340 REM ** NEW H VECTOR **
1350 SMAX=1E+10
1360 FOR I=1 TO NPLY
1370 IF Z(I)<>0 THEN S=-H(I)/Z(I)
1380 IF S>0 AND S<SMAX THEN SMAX=S
1390 NEXT I
1400 F$=""
1410 IF SMAX> 10 THEN F$="FAIL": RETURN
1420 S1=0:S2=SMAX:S=SMAX
1430 IF NC=0 THEN 1570
1440 GOSUB 740:GOSUB 230
1450 IF G$="FAIL" THEN S2=S ELSE S1=S
1460 IF S1=SMAX THE 1510
1470 S=(S1+S2)/2
1480 IF S2-S1<E2 AND S1=0 THEN F$="FAIL": S=0: GOTO 1630
1490 IF S1/(S2-S1)<4 THEN 1440
1500 S=S/2
1510 SREF=0
1520 FOR I= 1 TO NPLY
1530 H(I)=H(I)+Z(I)*S
1540 IF H(I)<E2 THEN H(I)=0
1550 SREF=SREF+H(I)*H(I)
1560 NEXT I
```

```
1570 S=0:SREF=SQR(SREF)
1580 GOSUB 960:GOSUB 740:GOSUB 2010
1590 IF SREF-S<E2 THEN F$="FAIL"
1600 FOR I= 1 TO NPLY
1610 H(I)=H(I)*S/SREF
1620 NEXT I
1630 S=0
1640 GOSUB 960:GOSUB 740:GOSUB 230
1650 RETURN
1660 REM ** DIRECTION **
1670 Z=0:UNORM=1
1680 FOR I=1 TO NPLY
1690 X(I)=0
1700 Z=Z+SGN(H(I))
1710 NEXT I
1720 Z=1/SQR(Z)
1730 IF NC=0 THEN 1850
1740 FOR I=1 TO NC
1750 P=C%(I,1):N=C%(I,2)
1760 GOSUB 440
1770 FOR J=1 TO NPLY
1780 LET X(J)=X(J)-Z(J)
1790 NEXT J,I
1800 UNORM =0
1810 FOR J=1 TO NPLY
1820 UNORM=UNORM + X(J)*X(J)
1830 NEXT J
1840 UNORM=SQR(UNORM):TEST=0
1850 FOR I=1 TO NPLY
1860 X(I)=X(I)/UNORM
1870 TEST=TEST+X(I)*Z*SGN(H(I))
1880 NEXT I
1890 UNORM =0
1900 FOR I=1 TO NPLY
1910 Z(I)=X(I)-TEST*Z*SGN(H(I))
1920 UNORM=UNORM+Z(I)*Z(I)
1930 NEXT I
1940 IF UNORM<.000001 THEN F$="FAIL": RETURN ELSE F$=""
1950 UNORM=SQR(UNORM)
1960 FOR I=1 TO NPLY
1970 Z(I)=Z(I)/UNORM
1980 NEXT I
1990 GOSUB 960
2000 RETURN
2010 REM ** STRAIN RATIO **
2020 FOR P =1 TO NPLY
2030 IF H(P)=0 THEN 2160
2040 II=P:GOSUB 1200
2050 FOR N= 1 TO NL
2060 B#=0:C#=0
2070 FOR I =1 TO 3
2080 FOR J=1 TO 3
2090 C#=C#-SREF*SREF*G(I,J)*E(N,I)*E(N,J)
2100 NEXT J
2110 B#=B#-SREF*S(I)*E(N,I)
2120 NEXT I
2130 SVAL=<-B#+SQR(B#*B#-4*C#*(1-E6)))/(2*(.000001))
2140 IF SVAL>S THEN S=SVAL
2150 NEXT N
2160 NEXT P
```

```
2170 RETURN
2180 REM ** IFP **
2190 Z=1/SQR(NPLY)
2200 FOR I=1 TO NPLY
2210 Z(I)=Z:H(I)=Z
2220 NEXT I
2230 GOSUB 960
2240 S=0:SREF=1
2250 GOSUB 740:GOSUB 2010
2260 FOR I=1 TO NPLY
2270 H(I)=H(I)*S
2280 NEXT I
2290 S=0
2300 GOSUB 960:GOSUB 740:GOSUB 230
2310 RETURN
2320 REM ** TRANSFORM **
2330 FOR I =1 TO NPLY
2340 C2=COS(2*T(I)):C4=COS(4*T(I))
2350 S2=SIN(2*T(I)):S4=SIN(4*T(I))
2360 B(I,1)=V(1)+C2*V(2)+C4*V(3)
2370 B(I,2)=V(1)-C2*V(2)+C4*V(3)
2380 B(I,3)=V(4)-C4*V(3)
2390 B(I,4)=V(5)-C4*V(3)
2400 B(I,5)=S2/2*V(2)+S4*V(3)
2410 B(I,6)=S2/2*V(2)-S4*V(3)
2420 B(I,7)=V(6)+C2*V(7)
2430 B(I,8)=V(6)-C2*V(7)
2440 B(I,9)=S2*V(7)
2450 C(I,1)=U(1)+C2*U(2)+C4*U(3)
2460 C(I,2)=U(1)=C2*U(2)+C4*U(3)
2470 C(I,3)=U(4)-C4*U(3)
2480 C(I,4)=U(5)-C4*U(3)
2490 C(I,5)=S2/2*U(2)+S4*U(3)
2500 C(I,6)=S2/2*U(2)-S4*U(3)
2510 NEXT I
2520 RETURN
2530 REM ** INPUT **
2540 CLS
2550 PRINT "PRESS ANY KEY WHEN":PRINT "DESIRED MATERIAL":PRINT "APPEARS"
2560 FOR K = 1 TO 750:NEXT
2570 FOR M=0 TO 6
2580 REM IF M=6 THEN M$="NEW MATERIAL" ELSE READ M,EX,EY,VX,ES,TPLY,XT,YT,XC
     YC,SS,M
2590 CLS:PRINT M$:REM SOUND 20,1
2600 FOR J=1 TO 200
2610 IF INKEY$<>"" THEN 2640
2620 NEXT J,M
2630 GOTO 2570
2640 IF M=6 THEN GOSUB 9000:GOTO 2550
2650 CLS:PRINT "5 ";M$;" 5"
2660 PRINT "HOW MANY"
2670 INPUT "PLY GROUPS";NPLY
2680 CLS:PRINT "ENTER PLY GROUP"
2690 PRINT "ORIENTATIONS"
2700 FOR I =1 TO 200
2710 NEXT I
2720 CLS
2730 FOR I =1 TO NPLY
2740 PRINT "PLY ";I
2750 INPUT T(I)
```

```
2760 T(I)=FNRAD(T(I))
2770 NEXT I
2780 PRINT "ENTER NUMBER OF"
2790 PRINT "INDEPENDENT LOAD"
2800 INPUT "CONDITIONS";NL
2810 FOR I =1 TO NL
2820 CLS:PRINT "Load ";I;"in MPa. "
2830 INPUT "N1=";XN(I,1)
2840 INPUT "N2=";XN(I,2)
2850 INPUT "N6=";XN(I,3)
2860 FOR J =1 TO 3
2870 XN(I,J)=XN(I,J)*1000000!
2880 NEXT J,I
2890 RETURN
2900 REM ** INVARIENTS **
2910 VY = 1/(1-VX*VX*EY/EX)
2920 QXX=VY*EX*1E+09:QYY=VY*EY*1E+09
2930 QXY=VY*VX*EY*1E+09:QS=ES*1E+09
2940 U(1)=(3*QXX+3*QYY+2*QXY+4*QS)/8
2950 U(2)=(QXX-QYY)/2
2960 U(3)=(QXX+QYY-2*QXY-4*QS)/8
2970 U(4)=(QXX+QYY+6*QXY-4*QS)/8
2980 U(5)=(QXX+QYY-2*QXY+4*QS)/8
2990 EX=1E-12/(XT*XC):EY=1E-12/(YT*YC):ES=1E-12/(SS*SS)
3000 FX=(1/XT-1/XC)/1000000!:FY=(1/YT-1/YC)/1000000!
3010 EXY=-SQR(EX*EY)/2
3020 GXX=EX*QXX*QXX+2*EXY*QXX*QXY+EY*QXY*QXY
3030 GYY=EX*QXY*QXY+2*EXY*QXY*QYY+EY*QYY*QYY
3040 GXY=EX*QXX*QXY+EXY*(QXX*QXY+QXY*QXY)+EY*QXY*QYY
3050 GSS=ES*QS*QS
3060 GX=FX*QXX+FY*QXY
3070 GY=FX*QXY+FY*QYY
3080 V(1)=(3*GXX+3*GYY+S*GXY+4*GSS)/8
3090 V(2)=(GXX+GYY)/2
3100 V(3)=(GXX+GYY-2*GXY-4*GSS)/8
3110 V(4)=(GXX+GYY+6*GXY-4*GSS)/8
3120 V(5)=(GXX+GYY-2*GXY+4*GSS)/8
3130 V(6)=(GX+GY)/2
3140 V(7)=(GX-GY)/2
3150 RETURN
3160 REM ** OUTPUT **
3170 REM SOUND 15,2:REM SOUND 50,2
3180 K$="Hit any key to continue":U$="MN/m"
3190 CLS:TEST=0
3200 FOR I=1 TO NPLY
3210 TEST=TEST+H(I):NEXT I
3220 PRINT "TOTAL THICKNESS = "
3230 PRINT TEST;"m."
3240 PRINT USING "####.## Plies";TEST/TPLY
3250 PRINT K$;
3260 A$=INKEY$:IF A$<>"" THEN 3260
3270 IF INKEY$="" THEN 3270
3280 CLS:PRINT "Press Y if printout","of displayed result","is desired.
     Press N","if not";
3290 FOR I =1 TO 800:NEXT I
3300 A$=INKEY$:IF A$<>"" THEN 3300
3310 CLS:RESTORE 6120
3320 J=0:A$=INKEY$
3330 FOR I =1 TO 8
3340 READ A$:CLS:PRINT:PRINT A$:SOUND 20,1
```

```
3350 A$=INKEY$:IFA$="" THEN 3350
3360 PRINT A$;:FOR KK=1 TO 75:NEXT KK
3370 IF A$="Y" THEN J=J+1:C%(J,1)=I
3380 NEXT I
3390 IF J<>0 THEN LPRINT STRING$(24,"5")
3400 FOR K = 1 TO J
3410 ON C%(K,1) GOSUB 480,(5200),3460,3600,3820,3920,4010,8000
3420 LPRINT
3430 NEXT K
3440 CLS:PRINT "FINISHED",K$
3450 IF INKEY$="" THEN 3450 ELSE RUN
3460 CLS:LPRINT "Total Thickness ="
3470 LPRINT USING ".####^^^^ m.";TEST
3480 LPRINT USING "####.##  Plies";TEST/TPLY
3490 LPRINT
3500 A$="ANGLE  RATIO  #PLIES"
3510 LOCATE 0,1:PRINT A$:LPRINT A$
3520 FOR I =1 TO NPLY
3530 A=CINT((FNDEG(T(I))*100!))/100!
3540 B= CINT((H(I)/TEST*10000!))/10000!
3550 C=CINT((H(I)/TPLY*100!))/100!
3560 PRINT A;TAB(6);B;TAB(13);C
3570 LPRINT A;TAB(6);B;TAB(13);C
3580 NEXT I
3590 RETURN
3600 REM ** STRENGTH **
3610 LPRINT "STRENGTH RATIOS"
3620 LPRINT "1 = ULTIMATE STRAIN":
3630 LPRINT ">1 IS SAFE"
3640 FOR I=1 TO NL
3650 LPRINT "LOADING "I
3660 LPRINT "PLY"
3670 FOR P=1 TO NPLY
3680 IF H(P)=0 THEN 3800
3690 II=P:GOSUB 1200
3700 A#=0:B#=0
3710 FOR J=1 TO 3
3720 FOR K=1 TO 3
3730 A#=A#+G(J,K)*E(I,J)*E(I,K)
3740 NEXT K
3750 B#=B#+S(J)*E(I,J)
3760 NEXT J
3770 A#=(-B#+SQR(B#*B#+4*A#))/(2*A#)
3780 A=FIX(A#*10000!+.5)/10000!
3790 LPRINT FNDEG(T(P));TAB(10);A
3800 NEXT P,I
3810 RETURN
3820 REM ** STRAINS **
3830 LPRINT TAB(4);"LAMINATE STRAINS"
3840 FOR N=1 TO NL
3850 LPRINT "LOADING "N
3860 LPRINT USING "e1=+#.###E-03";E(N,1)*1000!
3870 LPRINT USING "e2=+#.###E-03";E(N,2)*1000!
3890 LPRINT USING "e6=+#.###E-03";E(N,3)*1000!
3900 NEXT N
3910 RETURN
3920 REM ** A MATRIX **
3930 CLS
3940 LPRINT "Norm. |A| in GPa. "
3950 FOR I= 1 TO 3
```

```
3960 FOR J=1 TO 3
3970 D(I,J)=A(I,J)/1E+09/TEST
3980 NEXT J,I
3990 GOSUB 7000
4000 RETURN
4010 REM ** A INVERSE **
4020 LPRINT "Compliance (normalized)"
4030 LPRINT "in 1/TPa."
4040 FOR I = 1 TO 3
4050 FOR J =1 TO 3
4060 D(I,J)=AI(I,J)*TEST*1E+12
4070 NEXT J,I
4080 GOSUB (7000)
4090 RETURN
4100 LPRINT "Material Properties"
4110 GET%M,EX,EY,VX,ES,TPLY,XT,YT,XC,YC,SS,M$
4120 LPRINT M$
4130 LPRINT "EX=";EX;" GPa"
4140 LPRINT "EY=";EY;" GPa"
4150 LPRINT "ES=";ES;" GPa"
4160 LPRINT "VX=";VX
4170 LPRINT "X=";XT; " MPa"
4180 LPRINT "Y=";YT; " MPa"
4190 LPRINT "S=";SS;" MPa"
4200 LPRINT "Ply Thicness";TPLY"m"
4210 RETURN
6000 DATA 10,5E-5,.1,1E-6
6120 REM DATA Ply properies,Loads,Total thickness &  ply ratios, Strength
     ratios
6130 REM DATA  Laminate strains,Stiffness matrix,Compliance matrix,Ply
     ratio graph
7000 REM FANCY
7010 LPRINT "-----------------------------"
7020 LPRINT USING "1###.###";D(1,1),D(1,2),D(1.3)
7030 A$="-----------------------------"
7040 LPRINT A$
7050 LPRINT USING "1###.###";D(2,1),D(2,2),D(2,3)
7060 LPRINT A$
7070 LPRINT USING "1###.###";D(3,1),D(3,2),D(3,3)
7080 LPRINT "-----------------------------"
7100 RETURN
8000 LPRINT "** PLY RATIO GRAPH **"
8010 LPRINT "ANGLE"
8020 Z=0:CLS
8030 FOR I =1 TO NPLY
8040 X(I)=H(I)/TEST
8050 IF X(I)>Z THEN Z=X(I)
8055 NEXT
8060 DELTA=CINT(Z/.08)/100
8070 A=CINT(DELTA*1000)
8080 IF A<>20 AND A<> 50 AND A<> 100 AND A<>150 THEN DELTA =DELTA+.01:GOTO 8070
8090 FOR I =1 TO NPLY
8100 Z= (X(I)/DELTA*12)+25
8110 II=CINT(ABS(COS(I/2*3.14159)))
8115 IF Z<26 THEN 8160
8130 FOR K = 6 TO 15
8140 A=K+II*16:LINE(26,A)-(Z,A),PSET
8150 NEXT K
8160 LOCATE 0,1+II*2:PRINT USING "+###";FNDEG(T(I)):LOCATE 0,0
8170 IF II=1 THEN COPY:CLS
```

```
8180 NEXT
8190 LPRINT TAB(4);"1 1 1 1 1 1 1 1 1":LPRINT TAB(6);"7":LPRINT USING "   .##";DE
LTA:LPRINT TAB(9);"PLY RATIO"
8200 RETURN
9000 PRINT "REVIEW OR NEW"
9010 INPUT "DATA (R/N)";A$
9020 IF A$="R" OR A$="r" THEN 9190
9030 PRINT "WHICH MATERIAL":PRINT "WILL YOU"
9040 INPUT "REPLACE (0-5)";I
9050 INPUT "EX(GPa) = ";EX
9060 INPUT "EY(GPa) = ";EY
9070 INPUT "VX = ";VX
9080 INPUT "ES(GPa) = ";ES
9090 INPUT "X(MPa) = ";X
9100 INPUT "X'(MPa) = ";XX
9110 INPUT "Y(MPa) = ";Y
9120 INPUT "Y'(MPa) = ";YY
9130 INPUT "THICKNESS (m) = ";TPLY
9140 INPUT "NAME (15 CHR. MAX)";M$
9150 PUT% I,EX,EY,VX,ES,TPLY,X,Y,XX,YY,S,M$
9160 PRINT "ADDITIONAL": INPUT "CHANGES (Y/N)";A$
9170 IF A$="Y" OR A$="y" THEN 9000
9180 RETURN
9190 PRINT "REVIEW WHICH":INPUT "MATERIAL (0-5)";M
9200 GOSUB 4100
9210 GOTO 9160
9560 DELETE 45
```

Computer Program For Sizing Hydraulic Cylinders

```
10 INPUT "Report or Query: ",R$
11 IF R$="r" THEN 5000
12 INPUT "P, L, N, E, SY, RHO: ",P,L,N,E,SY,RO
15 GOSUB 100
20 GOTO 12
100 PCRIT=N*P
110 I=(PCRIT*(L^2))/((3.1415^2)*E)
120 PD=((64*I)/3.1415)^.25
130 TEST=((4*L)/PD)-((2*(3.1415^2)*E)/SY)^.5
140 DIFF=(4*L/PD)-TEST
145 JC=0
150 IF DIFF > 0! GOTO 800
155 PRINT "JOHNSON COLUMN"
157 JC=1
160 PD=2*((PCRIT/(3.1415*SY))+(SY*(L^2))/((3.1415^2)*E))^.5
170 GOTO 900
800 PRINT "EULER COLUMN"
900 PRINT "MINIMUM PISTON DIAMETER IS ";PD
1000 STRESS = 4*PCRIT/(3.1415*(PD^2))
1010 NC=SY/STRESS
1020 PRINT "Factor of safety for compression: ";NC
1100 ID=2*((P*N)/(2000*3.1415926#))^.5
1124 AL=P
1125 P = 2000
1130 SR=((SY+(P*N))/(SY-(P*N)))^.5
1132 WT=(ID/2)*((SR-1)/(2-SR))
1140 OD=ID+(2*WT)
1160 ET=(.405*OD)*(((P*N)/SY)^.5)
1200 PRINT "Cylinder bore",ID
1210 PRINT "Wall thick",WT
1230 PRINT "End thick",ET
1240 PRINT "Cylinder Outside diameter", OD
1300 OL=L+(ET*3)
1310 OLEX=OL+L
1320 OLCT=OL
1330 PI=3.1415926540000001#
1332 DEF FNA(D)=3.1415926540000001#*((D/2)^2)
1340 MASS=RO*((FNA(OD)-FNA(ID))*(OL-(2*ET))+(FNA(ID)*(3*ET))+(L*FNA(PD)))
1350 OPN=MASS+(FNA(ID)*(OL-(3*ET)))*.0321
1360 CLO=MASS+(FNA(PD)*(OL-ET))*.0321
2000 PRINT "Cylinder Length: ",OL
2010 PRINT "Overall Length extended: ",OLEX
2020 PRINT "Overall Length contracted: ",OLCT
2030 PRINT "Mass (Empty): ",MASS
2040 PRINT "Mass (extended with fluid): ",OPN
2050 PRINT "Mass (contracted with fluid): ",CLO
2090 INPUT "Press RETURN to print report or SKIP to go to next ",A$
2092 IF A$="skip" THEN RETURN
2095 IF R$<>"r" THEN RETURN
2100 FOR I=1 TO 10 : LPRINT : NEXT
2110 LPRINT "Cylinder name: ";N$
2118 LPRINT
2120 LPRINT "Material:      ";M$
2130 LPRINT
2140 LPRINT "Actual load:   ",AL," (lb)"
```

```
2150 LPRINT "Extension:     ",L," (in)"
2160 LPRINT "Factor of Safety: ",N," "
2170 LPRINT
2180 LPRINT "Modulus of Elasticity: ",E," (psi)"
2190 LPRINT "Yield Strength:        ",SY," (psi)"
2200 LPRINT "Density:               ",RO," (lb/cu in)
2300 LPRINT
2400 LPRINT "-------------------------------------------------------"
2402 LPRINT
2410 LPRINT "Piston Diameter:       ",PD," (in)
2415 LPRINT
2420 LPRINT "Cylinder Bore Diameter:",ID," (in)
2430 LPRINT "Cylinder Wall Thickness:",WT," (in)
2440 LPRINT "Cylinder End  Thickness:",ET," (in)
2450 LPRINT "Cylinder Outside Diameter:",OD," (in)
2460 LPRINT "Cylinder Body Length:     ",OL," (in)
2470 LPRINT "Cylinder Length Extended:",OLEX," (in)
2480 LPRINT "Cylinder Length Closed:",OLCT," (in)
2485 LPRINT
2490 LPRINT "Weight Empty:           ",MASS," (lb)
2500 LPRINT "Weight Extended with Fluid:",OPN," (lb)
2510 LPRINT "Weight Closed with Fluid:",CLO," (lb)
4999 RETURN
5000 PRINT "4032-T6 Wrought Aluminum Alloy"
5010 M$="4032-T6 Wrought Aluminum Alloy"
5020 E=10300000#
5030 SY=46000!
5040 RO=.098
5100 GOSUB 7000
5500 PRINT "BRass"
5502 M$="C27000 Yellow Brass"
5504 E=1.54E+07
5506 SY=60200!
5508 RO=.309
5520 GOSUB 7000
6000 PRINT "Steel"
6010 M$="1050 Cold Drawn Steel"
6020 E=30000000#
6030 SY=84000!
6040 RO=.282
6100 GOSUB 7000
6999 END
7000 RESTORE
7010 READ N$,P,L,N
7015 IF N$="*End" THEN RETURN
7020 GOSUB 100
7030 GOTO 7010
10000 DATA "Outrigger",600,24,5
10010 DATA "Fork Tilt",5600,18,5
10020 DATA "Boom Extension",936,72,5
10030 DATA "Boom Tilt",5600,48,5
11000 DATA "*End",0,0,0
```

APPENDIX D
Progess Reports

PROGRESS REPORT: WEEK OF 4/27/86

Group Nine

Research into the Lunar Roving Vehicle (LRV) contined this week. A listing of possibly useful technical reports from NASA was assembled and the abstracts examined. These reports document design decisions made by NASA during the development of the LRV. The studies analyze several aspects of the LRV, including mobility, traction, radiation shielding, energy use and control, as well as performance. A list of the reports available at the libraray was made. The remaining reports deemed useful, but not in the libraray were aquired directly from NASA Huntsville Space Center.

Discussions this week focused of the lifting system for the fork lift. The popular consent is that some sort of kinematic combination of links is the best choice. Several options were presented. An arrangement which yields a straight line lifting motion of the fork is desired. Some flexibility tilting the load is needed for accurate positioning. It is also desired to be able to move the load inside the front wheels for stability during transportation. Several sketches of proposed designs are included.

ME 4182
GROUP #9 - LUNAR FORKLIFT

Progress Report for the Week of 5/5/86

This week consisted primarily of research and brainstorming sessions. Specifically, Lunar Roving Vehicle (LRV) documents were examined and a trip to the Huntsville Space & Rocket Center was made to observe an actual Lunar Rover. Then all of the LRV and construction equipment research was incorporated to determine the most efficient lifting mechanism for the forklift. The preliminary design uses a crane-like lifting boom that telescopes to obtain the desired lifting height. As the load moves to or away from the center of the vehicle, the battery/ballast pack will move in the same manner. Benefits of this technique are vehicle stability when picking up a load past the front wheels and better weight balance on the wheels when a load is being carried. The overall length will be eight feet and the primary structural material will be graphite epoxy. This material only has a temperature range up to 300 degrees Fahrenheit, therefore, a new material may be selected if heat build-up appears to be a problem. A design load of 1000 EARTH pounds will be the criteria used in the proper sizing of structural members, motors, power supplies, and wheels. Several sketches of the proposed design are included.

The project has been divided into ten sub-projects which are being developed individually. These topics include:

1. Motors (drive and lift)
2. Wheels & Steering
3. Batteries/Power Supply
4. Hydraulics
5. Frame (structural)
6. Boom & Forks
7. Material Selection
8. Controls
9. Radiation Shielding & Heat Dissipation
10. Safety

After more research and analysis, the findings of the ten sub-projects will be applied to the existing design. Much of the necessary research material is already in hand from either the Georgia Tech library or from the Marshall Space Flight Center.

It is planned that by next week, we will have more answers to our questions from the ten sub-projects. This will allow us to further finalize our design.

PROGRESS REPORT May 16,1986

Accomplishments in designing the lunar forklift this past week pertain to selection of materials, cooling of frame members, steering, and schematics.

In determining the size of the main frame and boom structures, computer information has been obtained. Much time has been spent converting the computer language into IBM PC Basic from which we will be able to size composite members. The main frame of the forklift will probably be formed by an extrusion process in order to provide for a cooling fluid to pass through. Schematics for a cooling system have been drawn up, with replacable "cooling packs" for when the fluid heats up to the point of uselessness.

The number of electric motors for the forklift has been narrowed down to seven. Four of these will be used to drive the wheels. Two small motors will provide for steering the vehicle, and the seventh motor will power a hydraulic pump for operating the boom.

The steering system will be much like that of the LRV. Both front and rear wheels are capable of turning independently or simultaneously. This will enable round steer and oblique steer for tighter turning and movement in an angular direction. We have decided that two small motors will control the steering; one for the front wheels and one for the back wheels. Linkages will extend from each wheel to its designated motor.

Other work accomplished this past week include a schematic of the whole forklift including the hydraulic and electrical systems. Also design of a positionable and removeable battery pack has been investigated for stability and power reasons.

PROGRESS REPORT FOR WEEK ENDING 5/23/86

GROUP 9

The majority of the work this week has been on the final sizing of components. The material chosen for the chassis and boom is 4032-T6 wrought aluminum alloy. This was chosen for its high strength to weight ratio. The composite materials previously considered were rejected due to their inability to withstand the temperature extremes of the lunar surface. The boom, which is the heart of the lift system, is a telescoping member. The outer sleeve is a hollow rectangular section measuring nominally four inches by six inches with a thicknesses of 0.371 inches and 0.25 inches. The inner member is also rectangular, measuring 3 inches by 4.5 inches. The telescoping action will be accomplished by the use of a hydraulic cylinder inside the boom.

The chassis configuration has been developed and the sizing of the members has begun. Stability was the main concern in the design of the chassis. Because of the light weight of the vehicle, good balance is essential (while lifting, transporting, and also when unloaded) to avoid loosing traction or tipping over. The motors, batteries, pumps, and reserviors are located strategically to act as counterweights and balance the vehicle.

The sizing of the hydraulic system is also well under way. The system pressure is 2000 pounds with a low capacity pump. The low capacity pump will be lighter and will save on power requirements. It will also limit the speed of the lifting

mechanism keeping inertia forces to a minimum. The hydraulic fluid and pump will be cooled to keep the system operating at about 150 to 200 degrees to avoid excessive viscosity losses.

Several cooling schemes have been considered and the governing equations are being developed to find the the most efficient system.

Work on the steering system is continuing as well as the sizing of the wheels. The overall vehicle weight is needed to determine the final size of the wheels.

Radiation analysis work is also being done and a barrier coating system is being developed to protect the vehicle.

ME 4182 Group #9 Progress Report

During our last project meeting we decided to list possible alternative forms of traction, power generation, steering, and lifting design.
Some of these designs suggested during our brainstorming session included:

Traction:
1. Mesh wheels similar to those used on the lunar rover (3, 4, 5, or 6)
2. Tread such as those found on a military tank.
3. Two treads and two skis (snow mobile)
4. Two treads and two wheels (half track)
5. A hovercraft design.
6. A walker design.
7. The use of long cylinders that run the width of the vehicle.

The treads were rejected because it was felt they would create trenches making the working surface uneven.

The hovercraft concept was rejected due to the fact that large amounts of dust would be kicked up and it would be difficult to control. The dust would not only restrict the vision of the operator, but would also inhibit radiative cooling.

The walker was discounted as being impractical to build, heavy, and difficult to make stable.

The flywheel design would be hard to control because of Gyroscopic torque. The disk would need to be heavy or rotate very fast. In addition, some source would be needed to start the flywheel rotating.

The long cylinders and the Mesh wheels were accepted as having merit and deserve further consideration.

Power Generation:
1. Batteries
   a. Recharged by solar cells
   b. Recharged by other means
2. Fuel cells
3. Liquid propellant
4. Nuclear
5. compressed air
6. Solar Sail
7. Heat cells
8. Large flywheel.

The liquid propellant idea seemed cost prohibitive due to the cost of transporting fuel, however some designs may incorporate small liquid propellant rockets to help overcome large momentum forces.

Nuclear power was discounted at the present time because proper cooling would not be possible, and heavy shielding would probably be Necessary. In the future, however, nuclear power

may be used to recharge batteries off the lift.
The compressed air and solar sail were rejected because they would not be able to create enough propulsion.

Not enough is known about heat cells by this group to render a decision at the present time.
Batteries seem to hold promise but are heavy and obviously need to be recharged. Varying availability of sunlight may present a problem.
Fuel cells may not be practical due to the high cost of transporting fuel. Again heat dissipation may become a problem More research is required.
The large flywheel concept seemed impractical due to the fact that a source of power would still be needed to start the wheel rotating. In addition, problems with gyroscopic torque would be difficult to over come.

Steering:
1. All "wheel" independent steer.
2. Sets of wheels steering together.
3. Front wheel steer only.
4. Pivoting (clutch wheels).
   Slowing or stopping one set of wheels while speeding up the other set.
5. Pivoting (treads).
6. Articulated steer (barrel steer).

Pivoting with treads may be discounted because of the rutts it produces.
All wheel independent steering would be difficult to control at best.
Front wheel steer would be adequate but would not give the maneuverability desired for a fork lift.
Pivoting with clutch wheels we feel would cause rutts as well.

Articulated steer, rear wheel steer, and set wheel steer seem to be the best choices.

Lifting device:

Proposals for lifting devices are being drawn up by each member. To be considered in the design are weight, surface conditions, lifting range, and weight distribution.

Jeff Hynds
Bruce Reynolds
Michael Minchew
David Martucci
Jeff Dilg
Robert Dirksen
Joe Gentry

APPENDIX E
Record of Invention

RECORD OF INVENTION - Part I

This is an important legal document. Read instructions carefully before filling in data.

PROJECT NO. 9

CONTRACT NO. _____ RECOMMENDED SECURITY CLASSIFICATION _____ REC. OF INV. NO. _____

1. NAME OF INVENTOR: Ernest Jefferson Hynds — POSITION: STUDENT

2. DEPARTMENT OR DIVISION: ME 4182 GEORGE W. WOODRUFF SCHOOL OF MECHANICAL ENGINEERING

3. DATES OF EMPLOYMENT: APRIL 3, 1986 TO JUNE 5, 1986

4. PRESENT ADDRESS (No. Street, City, County, State): P.O. BOX 35602, ATLANTA, GA. 30332 — TELEPHONE: 676-0385 — PERMANENT OR UNTIL:

5. PERMANENT ADDRESS (No. Street, City, County, State): 175 CLIFTON DR., ATHENS, GA. 30606 — TELEPHONE:

6. NAMES (S) AND ADDRESS (ES) OF CO-INVENTORS (If any)

KEMP B. REYNOLDS P.O.BOX 33009, ATLANTA, GA. 30332 — WILLIAM J. GENTRY 154 5th ST. NW, ATLANTA 30313

ROBERT DIRKSEN P.O. BOX 33236, ATLANTA, GA. 30332 — MICHAEL C. MINCHEW P.O. BOX 33630, ATLANTA 30332

DAVID L. MARTUCCI P.O. BOX 32335, ATLANTA, GA. 30332 — JEFFREY A. DILG P.O. BOX 32172, ATLANTA, GA 30332

7. DESCRIPTIVE TITLE OF INVENTION: LUNAR FORKLIFT

8. LIST DRAWINGS, SKETCHES, PHOTOS, REPORTS, DESCRIPTIONS, NOTEBOOK ENTRIES, ETC. WHICH SHOW OR DESCRIBE INVENTION: ATTACHED

9. EARLIEST DATA AND PLACE INVENTION WAS CONCEIVED (Brief outline of circumstances)

ON 10 APRIL 1986 OUR GROUP WAS ASSIGNED THE PROJECT OF DESIGNING A FORKLIFT FOR USE ON THE MOON. SKETCHES WERE CONCIEVED AT THE GEORGIA TECH LIBRARY.

10. DATE AND PLACE OF FIRST SKETCH, DRAWING OR PHOTO: APRIL 10, 1986 GROUP MEETINGS SCHEDULED AND CRUDE SKETCHES MADE

11. DATE AND PLACE OF FIRST WRITTEN DESCRIPTION: APRIL 25, 1986 WRITTEN PROGRESS REPORT WRITTEN (FIRST ONE MISSED)

12. DISCLOSURE OF INVENTION TO OTHERS

NAME, TITLE AND ADDRESS	FORM OF DISCLOSURE	DATE AND PLACE OF DISCLOSURE	WAS SIGNATURE OBTAINED (YES OR NO)
MR J. W. BRAZELL, PROFESSOR, RM 218C SST #1	ORAL	APRIL 18, 1986 SST BUILDING	NO

12.A IMPORTANT - HAVE ANY PUBLICATIONS OR REPORTS BEEN MADE ON THIS INVENTION? YES

13. DATE AND PLACE OF COMPLETION OF FIRST OPERATING MODEL OR FULL SIZE DEVICE: DOES NOT APPLY NO MODEL MADE

14. PRESENT LOCATION OF MODEL: DOES NOT APPLY

15. DATE, PLACE, DESCRIPTION AND RESULTS OF FIRST TEST OR OPERATION: DOES NOT APPLY

16. NAMES AND ADDRESSES OF WITNESSES OF FIRST TEST

DOES NOT APPLY

17. DATE, PLACE, DESCRIPTION AND RESULTS OF LATER TESTS (name witnesses)

DOES NOT APPLY

18. IDENTIFY RECORDS OF TESTS AND GIVE PRESENT LOCATION OF RECORDS

DOES NOT APPLY

19. PRIOR REPORTS OR RECORDS OF INVENTION TO WHICH INVENTION IS RELATED

NASA REPORTS N72-18244 CHASSIS N69-31329 WIRE TIRES & ABRASIVE TREADS

N70-36674 LRV WHEEL EVALUATION

N66-15483 PRELIM. DESIGN N64-17723 RADIATION SHIELDS, THERMAL CONTROL

20. OTHER KNOWN CLOSELY RELATED PATENTS, PATENT APPLICATIONS AND PUBLICATIONS

PATENT OR APPLICATION NO.	DATE	TITLE OF INVENTION OR PUBLISHED ARTICLE	NAME OF PUBLICATION
NONE			

21. EXTENT OF USE: PAST, PRESENT AND CONTEMPLATED (Give dates, places and other pertinent details)

NONE

22. DETAILS OF INVENTION HAVE BEEN RELEASED TO THE FOLLOWING COMPANIES OR ACTIVITIES

NAME AND ADDRESS	INDIVIDUAL OR REPRESENTATIVE	CONTRACT NO.	DATE
GEORGE W. WOODRUFF SCHOOL OF MECHANICAL ENGINEERING GEORGIA INSTITUTE OF TECHNOLOGY	MR. J.W. BRAZELL	9	JUNE 3, 1986

SIGNATURE OF INVENTOR Ernest Jefferson Hyndman DATE 6/13/86

RECORD OF INVENTION - Part II

(Attach to Record of Invention Part I)

REC. OF INV. NO. _____

This Disclosure of Invention should be written up in the inventor's own words and generally should follow the outline given below. Sketches, prints, photos and other illustrations as well as reports of any nature in which the invention is referred to, if available, should form a part of this disclosure and reference can be made thereto in the description of construction and operation.

1. INVENTORS NAME(S)

2. TITLE OF INVENTION

For answers to following questions use remainder of sheet and attach extra sheets if necessary.

3. GENERAL PURPOSE OF INVENTION. STATE IN GENERAL TERMS THE OBJECTS OF THE INVENTION.

4. DESCRIBE OLD METHOD(S) IF ANY, OF PERFORMING THE FUNCTION OF THE INVENTION.

5. INDICATE THE DISADVANTAGES OF THE OLD MEANS OR DEVICE(S).

6. DESCRIBE THE CONSTRUCTION OF YOUR INVENTION, SHOWING THE CHANGES, ADDITIONS AND IMPROVEMENTS OVER THE OLD MEANS OR DEVICES

7. GIVE DETAILS OF THE OPERATION IF NOT ALREADY DESCRIBED UNDER 6.

8. STATE THE ADVANTAGES OF YOUR INVENTION OVER WHAT HAS BEEN DONE BEFORE.

9. INDICATE ANY ALTERNATE METHODS OF CONSTRUCTION.

10. IF A JOINT INVENTION, INDICATE WHAT CONTRIBUTION WAS MADE BY EACH INVENTOR.

11. FEATURES WHICH ARE BELIEVED TO BE NEW.

12. AFTER THE DISCLOSURE IS PREPARED, IT SHOULD BE SIGNED BY THE INVENTOR(S), AND THEN READ AND SIGNED AT THE BOTTOM OF EACH PAGE BY TWO WITNESSES USING THE FOLLOWING STATEMENT:

"DISCLOSED TO AND UNDERSTOOD BY ME THIS_____DAY OF_____19___

SIGNATURE_____."

SEE ATTACHED REPORT

CONTRIBUTION

- ERNEST J. HYNDS - GROUP LEADER.- BATTERIES, INTRODUCTION, BACKGROUND INFORMATION.
- KEMP B. REYNOLDS - BOOM DESIGN, OUTRIGGERS, PRESENTATION
- ROBERT DIRKSEN - STEERING
- DAVID L. MARTUCCI - HYDRAULIC DESIGN, COMPUTER PROGRAM
- WILLIAM J. GENTRY - CHASSIS DESIGN, COMPOSIT SECTION, COMPUTER PROGRAM
- MICHAEL C. MINCHEW - COOLING - HEAT SINK DESIGN
- JEFFREY A. DILG - WIRING, RADIATION SHIELDING, OP. INSTRUCTIONS.

APPENDIX F
Alternate Concept Drawings

NATIONAL
42-381 50 SHEETS 5 SQUARE
42-382 100 SHEETS 5 SQUARE
42-389 200 SHEETS 5 SQUARE

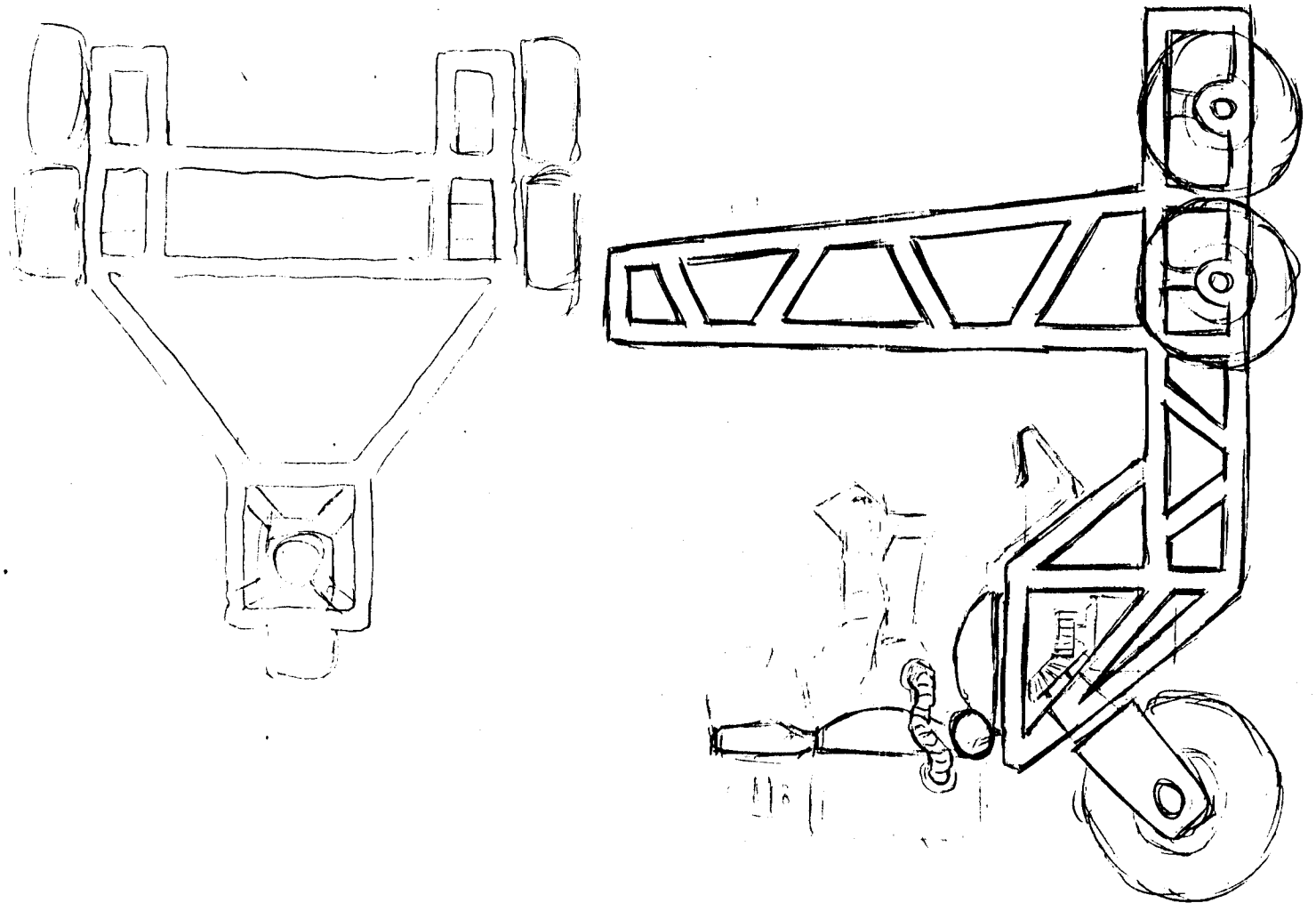

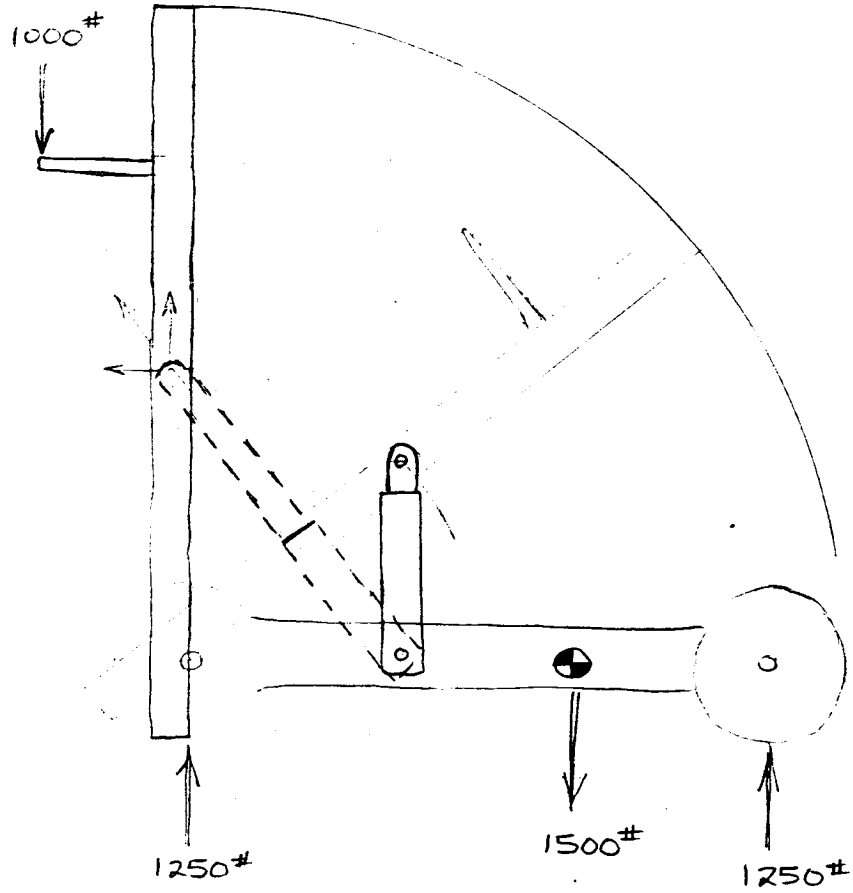

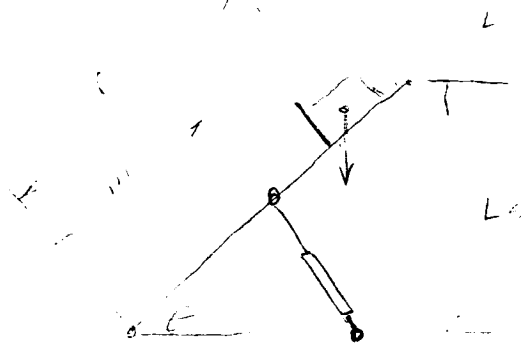

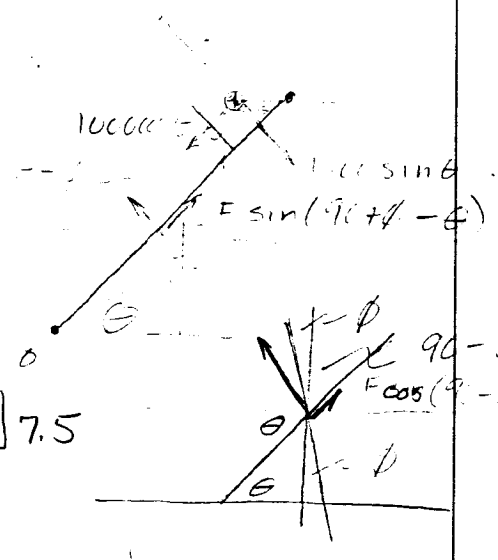

$$\Sigma M_L = (1000\cos\theta)1.5 + [F\sin(90-\theta+\phi)]7.5 - (1000\sin\theta)\ell$$

$$= 1500\cos\theta + F[\sin 90\cos(\theta+\phi) - \cos 90\sin(\theta+\phi)]7.5 - 1000\ell\sin\theta$$

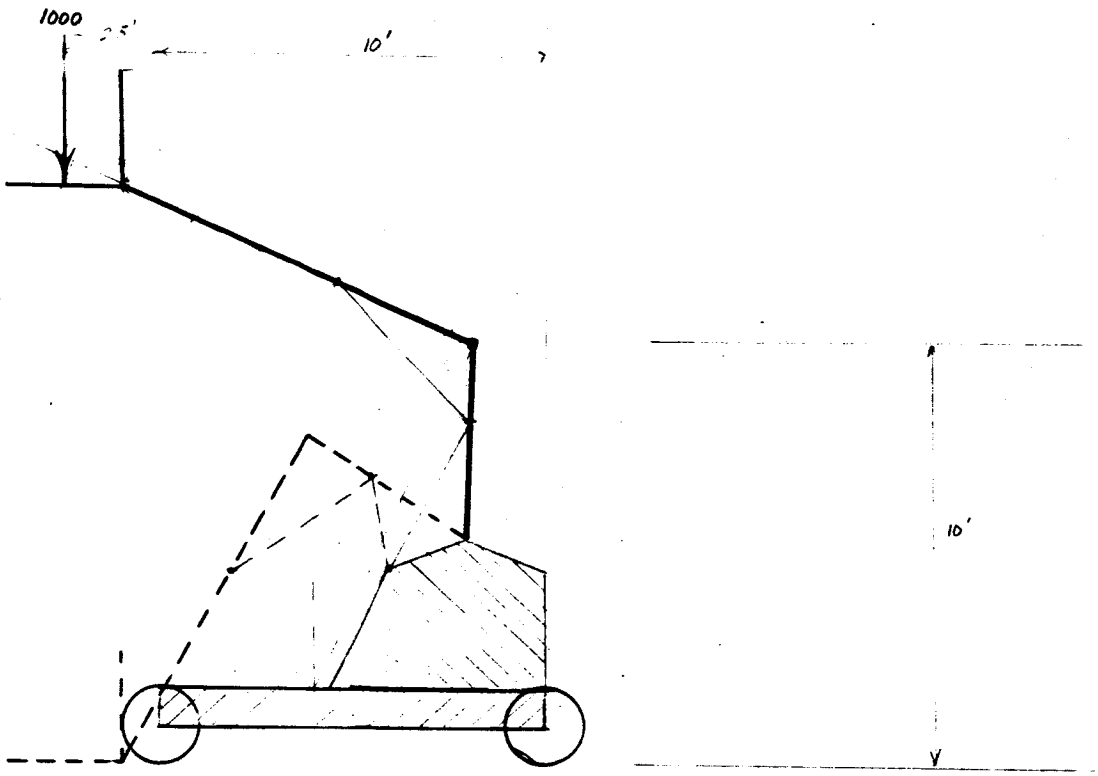

NATIONAL
42-381 50 SHEETS 5 SQUARE
42-382 100 SHEETS 5 SQUARE
42-389 200 SHEETS 5 SQUARE

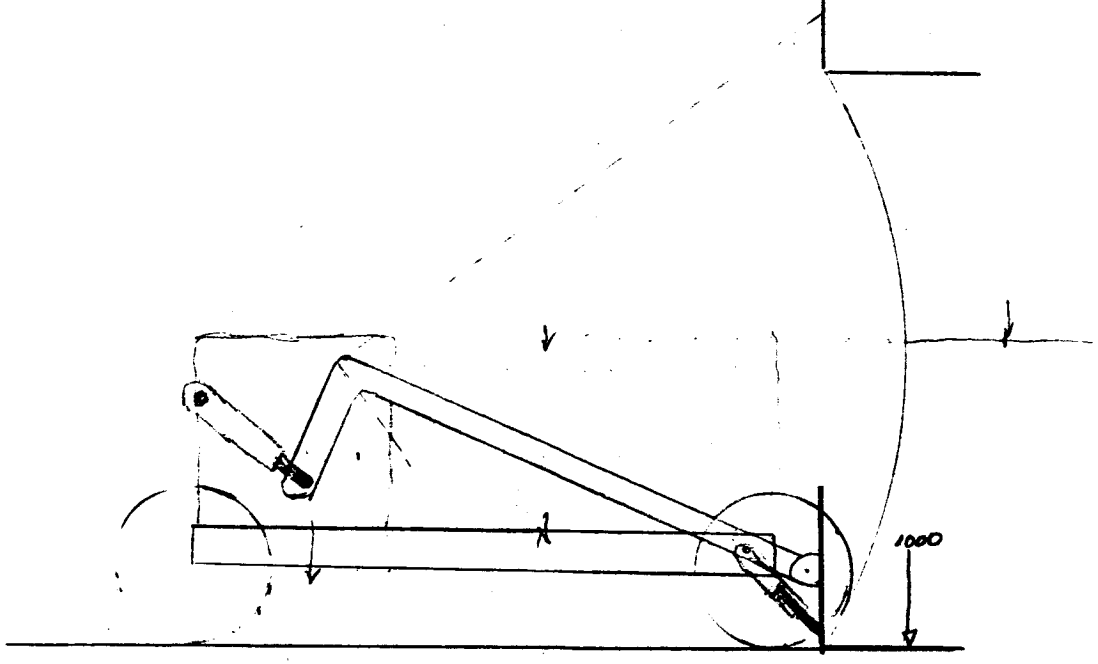

WORST CASE

MAX MOMENT BY 1000 lb LOAD

17 ft (1000 lb) = 17000 lb

Hydrolic must produce $\frac{17000}{4}$ = 4,250 lb of FORCE

$6(1000) = \frac{6000}{13}$ = 462 lb Load NOT TO TIP OVER

(Poor traction AND stability HOWEVER)

$\left(\frac{12000}{6}\right)$ = 2000 lb FOR GOOD STABILITY

50/50 WEIGHT DISTROBUTION

TO LONG

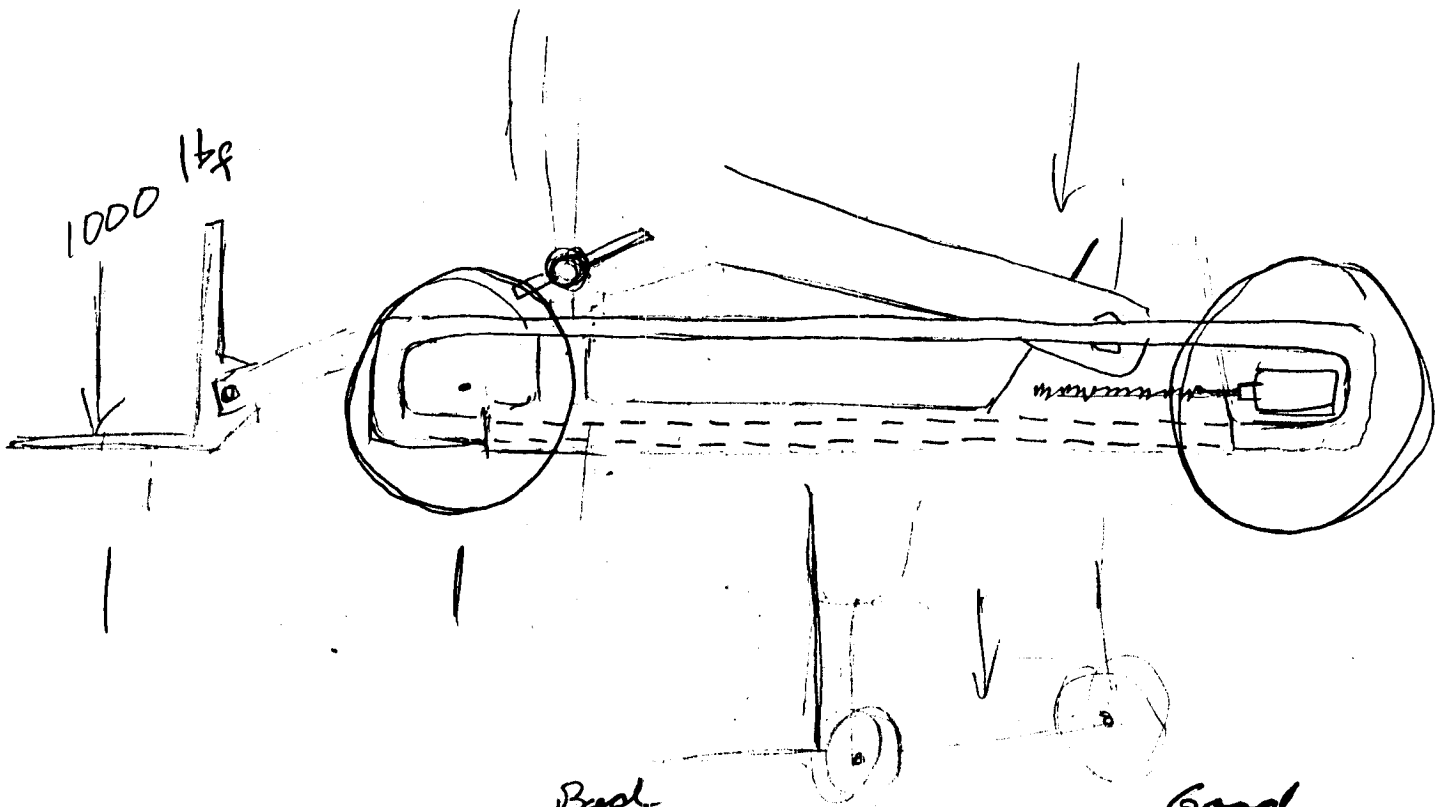

Bad

22- 24 ft long

Bad manuverability
difficult to transport

Good

Low center
of gravity
shifting Balcast

NATIONAL
42-381 50 SHEETS 5 SQUARE
42-382 100 SHEETS 5 SQUARE
42-389 200 SHEETS 5 SQUARE

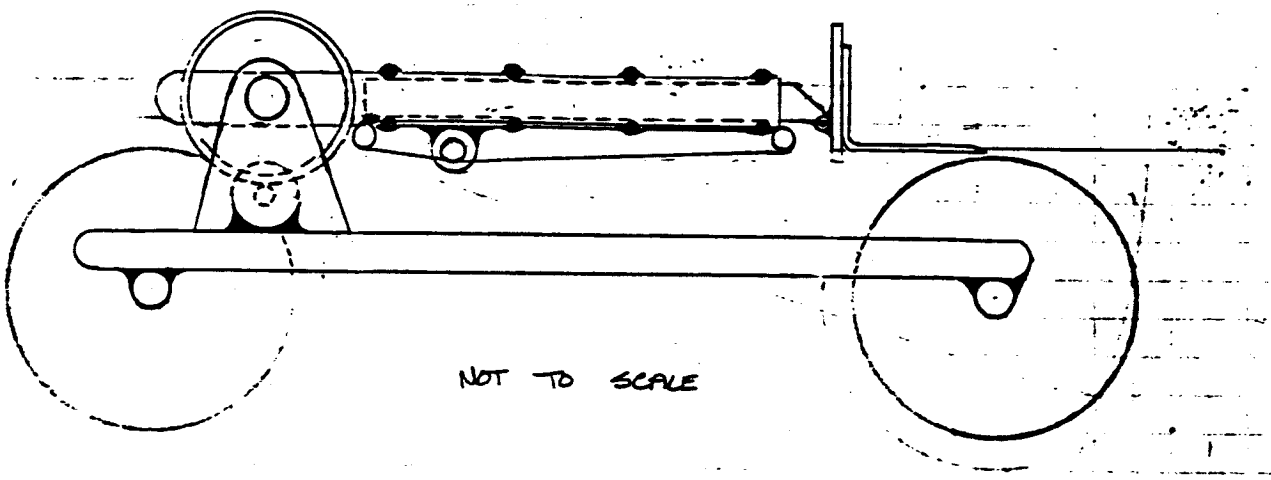

NOT TO SCALE

$\frac{1}{2}$" = 1'

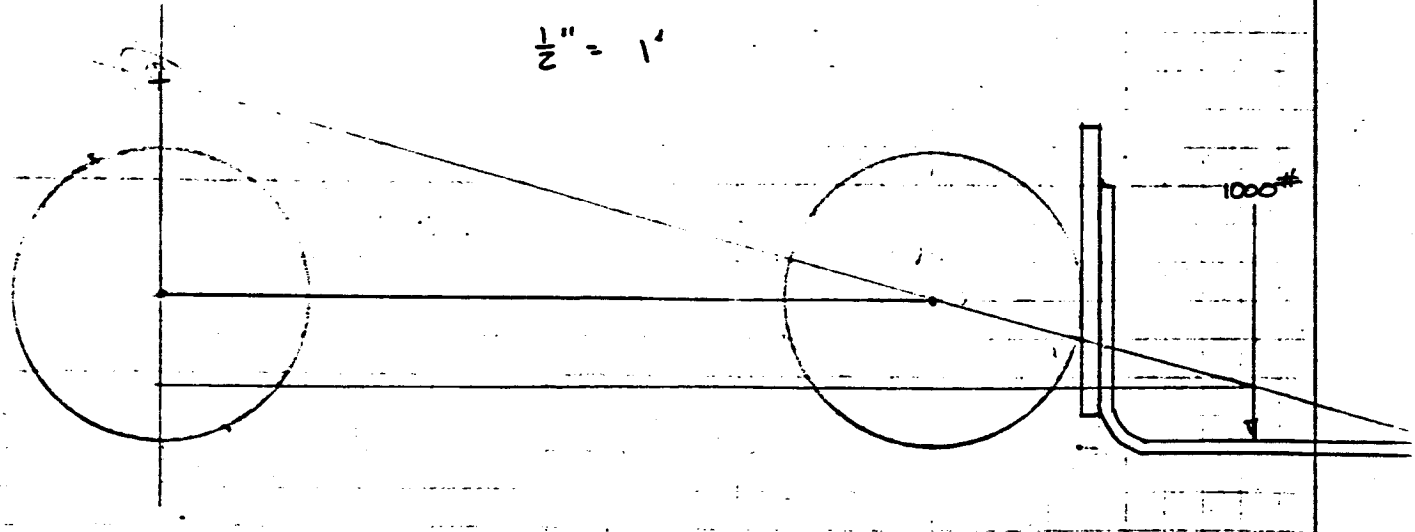

MOMENT ARM $\cong$ 13 ft NEED -APPROX. TORQUE FOR 14 ft

MOMENT = 14 (1000) = 14,000 ft-lb

42.381 50 SHEETS 5 SQUARE
42.382 100 SHEETS 5 SQUARE
42.389 200 SHEETS 5 SQUARE
NATIONAL

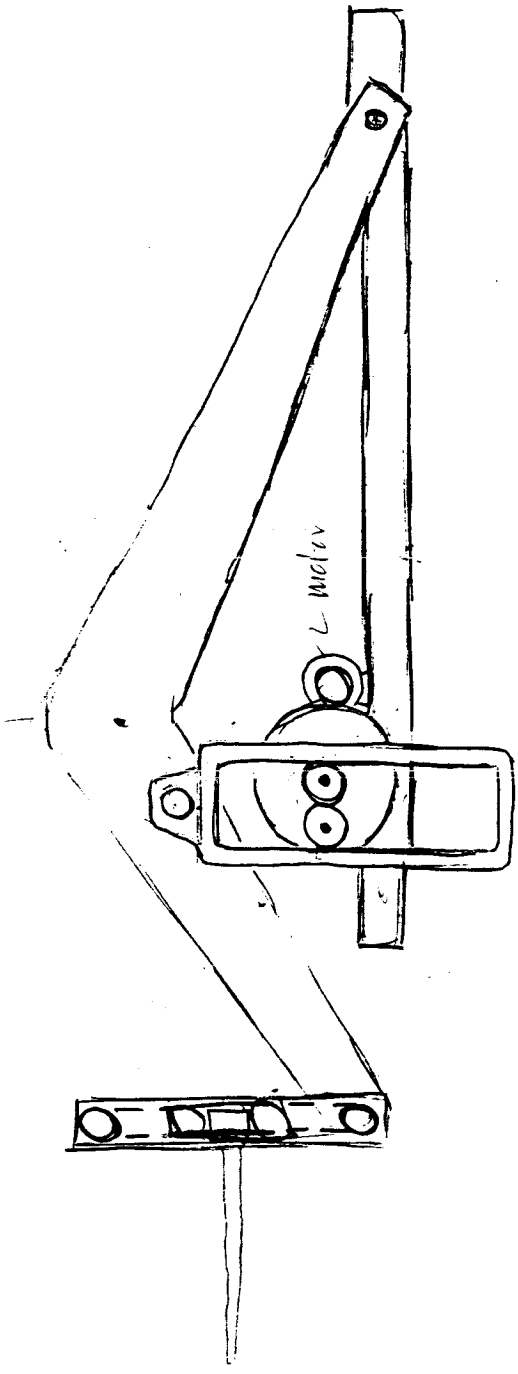

NATIONAL
42-381 50 SHEETS 5 SQUARE
42-382 100 SHEETS 5 SQUARE
42-389 200 SHEETS 5 SQUARE

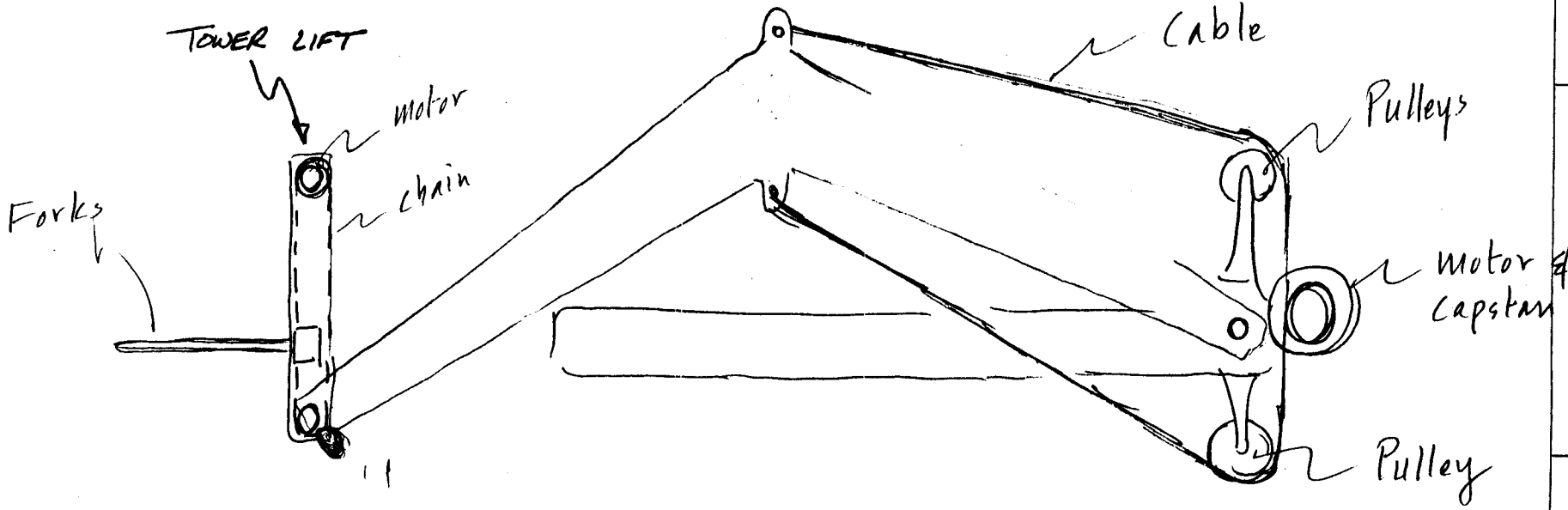

NATIONAL
42-381 50 SHEETS 5 SQUARE
42-382 100 SHEETS 5 SQUARE
42-389 200 SHEETS 5 SQUARE

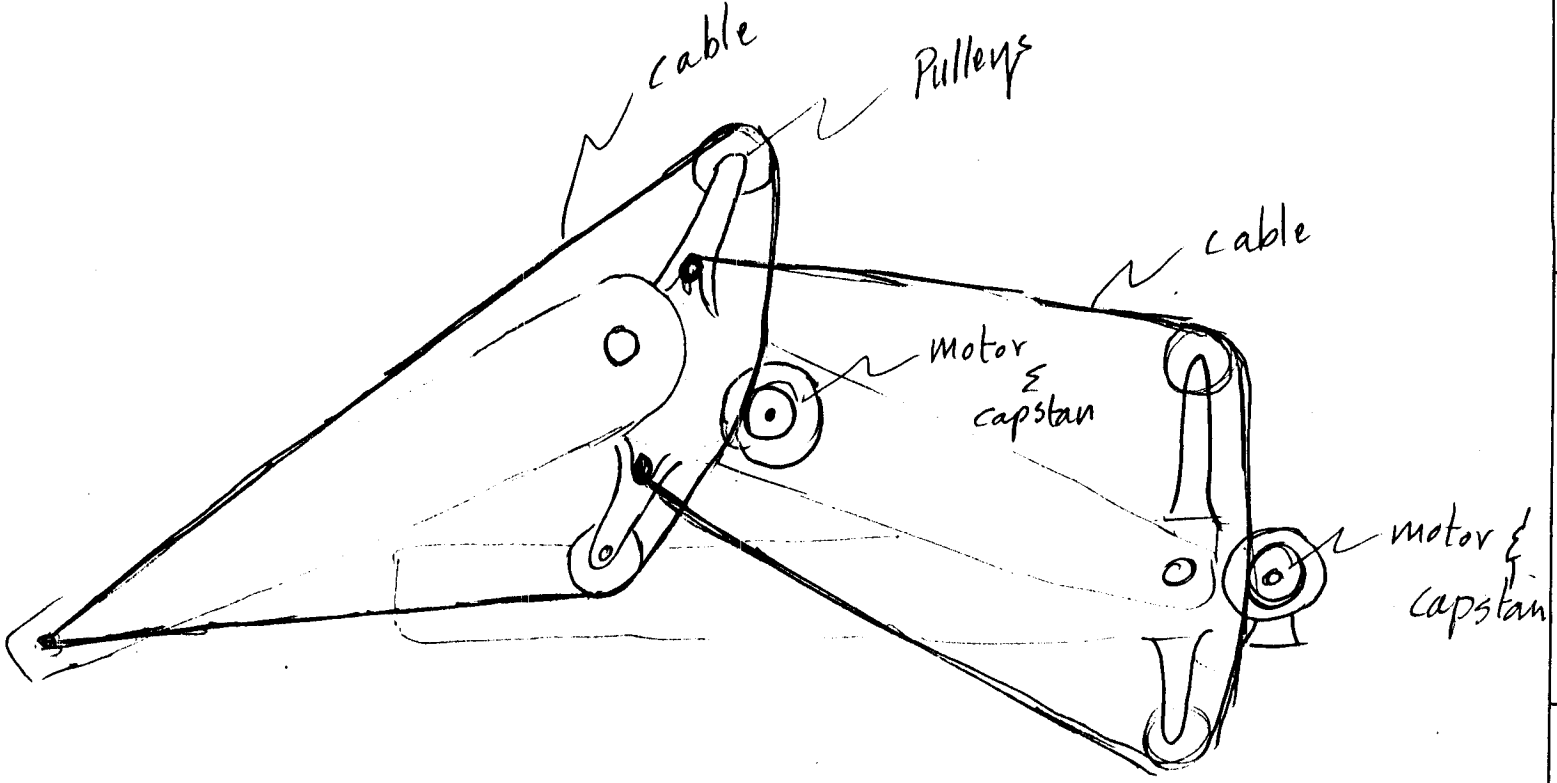

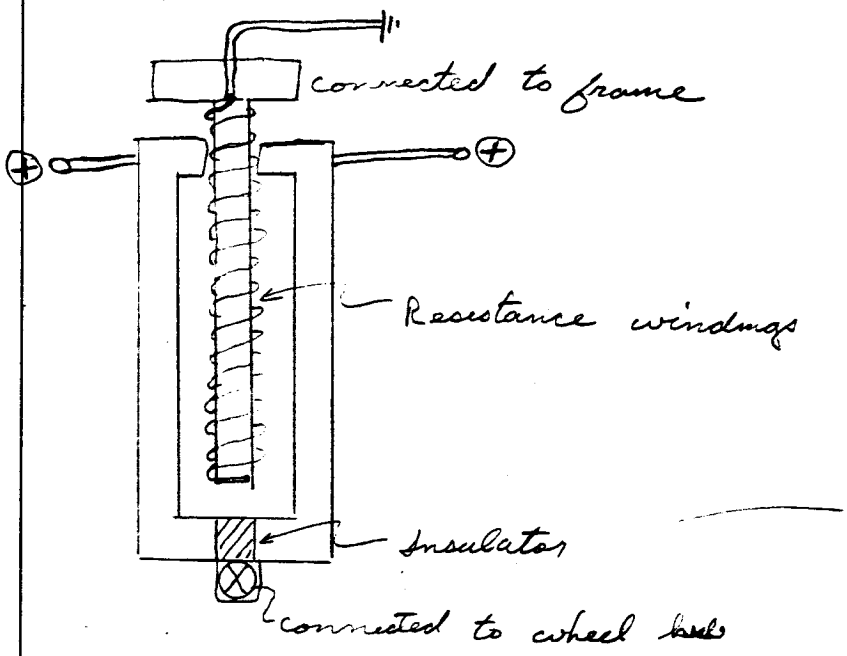

(#6) Variable Resistance height indicator

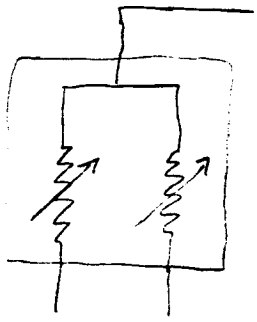

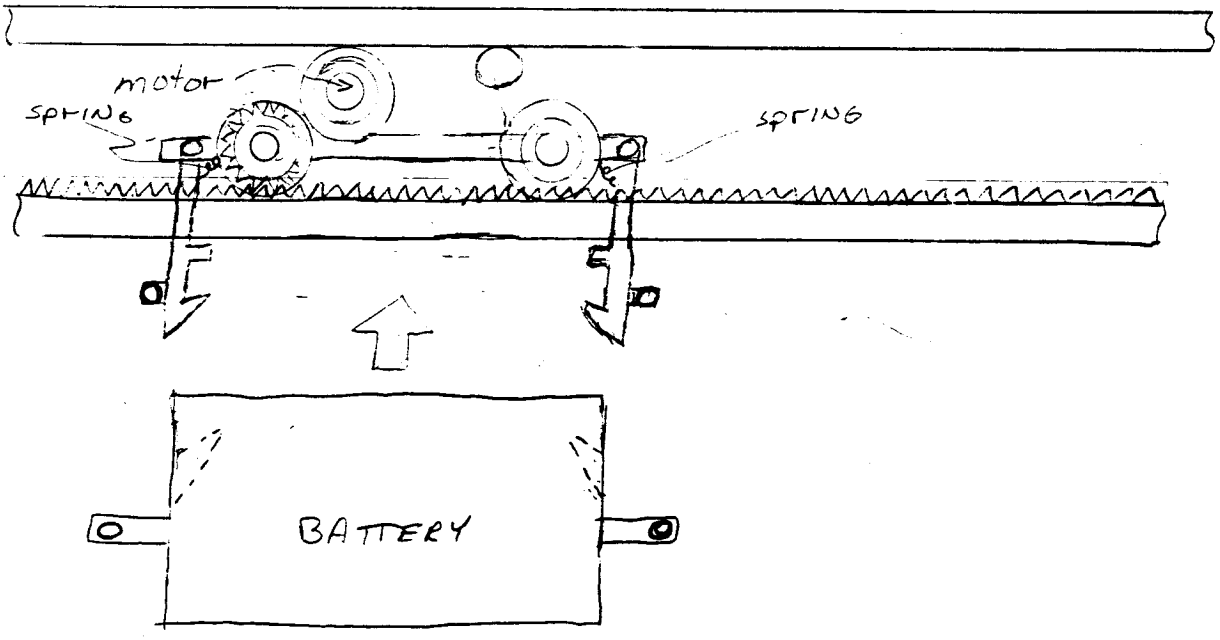

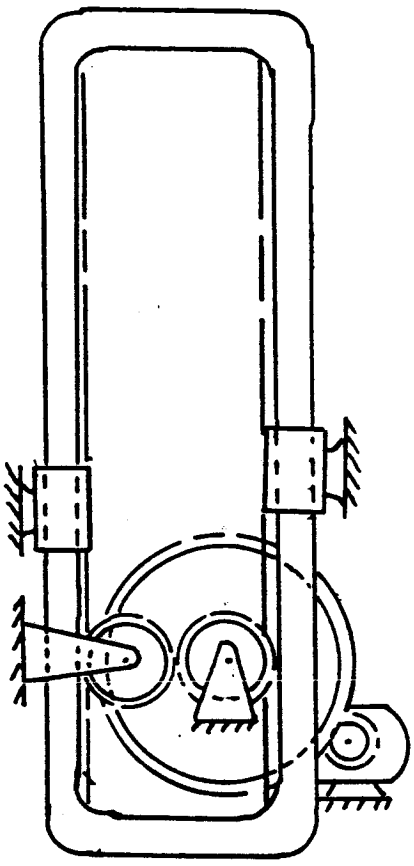

HYDRAULIC SIMULATOR

THE HYDRAULIC SIMULATOR HAS THE ADVANTAGE OF BEING MECHANICALLY EFFICIENT WITH OUT THE USE OF HYDRAULIC FLUID. THE DESIGN WAS REJECTED BECAUSE OF THE LARGE LOWER CLEARANCE NEEDED.